ACCIDENT REPORT

Report on the investigation of the fire and subsequent foundering of the passenger transfer catamaran ***ECC Topaz*** while conducting engine trials off the east coast of England 14 January 2014

VERY SERIOUS MARINE CASUALTY REPORT NO 4/2015 FEBRUARY 2015

MAIB
MARINE ACCIDENT INVESTIGATION BRANCH

Extract from

The United Kingdom Merchant Shipping

(Accident Reporting and Investigation)

Regulations 2012 – Regulation 5:

"The sole objective of the investigation of an accident under the Merchant Shipping (Accident Reporting and Investigation) Regulations 2012 shall be the prevention of future accidents through the ascertainment of its causes and circumstances. It shall not be the purpose of an investigation to determine liability nor, except so far as is necessary to achieve its objective, to apportion blame."

NOTE

This report is not written with litigation in mind and, pursuant to Regulation 14(14) of the Merchant Shipping (Accident Reporting and Investigation) Regulations 2012, shall be inadmissible in any judicial proceedings whose purpose, or one of whose purposes is to attribute or apportion liability or blame.

All MAIB publications can be found on our website: www.maib.gov.uk

For all enquiries:
Marine Accident Investigation Branch
Mountbatten House
Grosvenor Square
Southampton
United Kingdom
SO15 2JU

Email: maib@dft.gsi.gov.uk
Telephone: +44 (0) 23 8039 5500
Fax: +44 (0) 23 8023 2459

CONTENTS

FIGURES

TABLE

ANNEXES

GLOSSARY OF ABBREVIATIONS AND ACRONYMS

ºC	Degree Celsius
AC	Alternating current
AIS	Automatic Identification System
CMID	Common Marine Inspection Document
CO_2	Carbon dioxide
DC	Direct current
EPIRB	Emergency position indicating radio beacon
GRP	Glass reinforced plastic
IMCA	International Marine Contractors Association
ISO	International Organization for Standardization
kt	knot
kW	kilowatt
LOC	London Offshore Consultants
m	metre
MCA	Maritime and Coastguard Agency
RAF	Royal Air Force
RNLI	Royal National Lifeboat Institution
SART	Search and rescue transponder
SCMS	Society of Consulting Marine Engineers & Ship Surveyors
SCV	Small commercial vessel
SI	Statutory instrument
UTC	Universal Coordinated Time
VHF	Very high frequency

TIMES: all times used in this report are UTC unless otherwise stated

SYNOPSIS

On 14 January 2014, at approximately 1245, the 14m passenger transfer catamaran *ECC Topaz* caught fire 11 nautical miles south-east of Lowestoft. The three crew members on board the vessel were unable to extinguish the fire, which spread rapidly throughout its glass reinforced plastic structure, forcing them to abandon to a liferaft. The crew were airlifted to safety within an hour of abandoning their vessel. At 1420, the burnt-out wreck of the vessel sank in 33m of water. There were no passengers on board and no water pollution was caused as a result of the accident.

In February 2014, following reports of charring on workboats similar to *ECC Topaz* as a result of modifications made to oil fired air heater exhaust pipes, the MAIB issued a safety bulletin. The safety bulletin informed the industry of the accident and alerted it to the fire hazard posed by uninsulated exhaust pipes. The MAIB investigation has subsequently determined that there were two plausible causes for the fire: an uninsulated section of the exhaust pipe from an oil fired air heater igniting the wooden deck it was routed through; or a degraded exhaust pipe from the same device causing the hot exhaust gas to leak and impinge directly on to flammable material stored in the compartment.

The skipper detected the fire after it had spread into the wheelhouse from the compartment below, where the oil fired air heater was located. Under the relevant safety regulations, the oil fired heater was not categorised as an item of machinery and therefore the compartment was not required to be fitted with either fire detection or fire suppression equipment.

The British Marine Federation, in its role leading a group drafting an international standard for liquid fuel powered heating appliances and galley stoves, has made several amendments to the draft standard based on the lessons learnt from this accident. The Maritime and Coastguard Agency has modified the draft revision to *The safety of small workboats and pilot boats – a code of practice* by recognising liquid-fuelled heaters as machinery items and by referring further to the guidance contained in the international standard. The Royal Yachting Association has disseminated the lessons of this accident within the leisure boating sector with the aid of a flyer produced by the MAIB for this purpose. Blyth Workcats Ltd, the boat manufacturer, has rectified the modified exhaust pipes on all the affected workboats.

Eberspächer (UK) Ltd, the heater manufacturer, has been recommended to investigate an anomaly between the exhaust pipe temperature rating and exhaust gas temperature experienced in service. Blyth Workcats Ltd has been recommended to ensure that no modifications to equipment are carried out without authorisation and approval from the relevant equipment manufacturer.

SECTION 1 - FACTUAL INFORMATION

1.1 PARTICULARS OF *ECC TOPAZ* AND ACCIDENT

SHIP PARTICULARS	
Vessel's name	*ECC Topaz*
Flag	United Kingdom
Official number	917554
Type	Commercial vessel (catamaran)
Code	Category 2 (12 passengers, 2 crew) up to 60nm from safe haven
Registered owner	East Coast Charters Ltd
Manager(s)	East Coast Charters Ltd
Construction	Glass reinforced plastic
Year of build	2011
Propulsion	Twin Rolls Royce Kamewa water jet propulsion units, driven by 2 x Iveco C9 diesel engines, 456kW each
Length overall	14m
Gross tonnage	10.98
Minimum safe manning	2
Authorised cargo	3000kg cargo and 12 passengers
VOYAGE PARTICULARS	
Port of departure	Lowestoft
Port of arrival	Not applicable
Type of voyage	Coastal
Cargo information	Not applicable at the time of incident
Fuel in tanks	1000 litres in total (500 litres each in the aft inboard fuel tanks)
Manning	3 – skipper, two deckhands

MARINE CASUALTY INFORMATION	
Date and time	14 January 2014, approximately 1240
Type of marine casualty or incident	Very Serious Marine Casualty
Location of incident	11nm south-east of Lowestoft 52º 27.34'N 001º 03.18'E
Place on board	Compartment under wheelhouse housing the air heater
Injuries/fatalities	Nil
Damage/environmental impact	Air pollution
Ship operation	On passage
Voyage segment	Mid-water
External & internal environment	Wind north-westerly force 2-3, daylight, slight sea, dry, tide 1.8kt setting to the north
Persons on board	3

ECC Topaz

1.2 NARRATIVE

On 14 January 2014 at approximately 0915, the skipper and two deckhands of *ECC Topaz* arrived at Lowestoft Marina to take the vessel for a test run in order to investigate an intermittent technical problem with the port side main propulsion engine. Immediately after boarding, the skipper started the diesel fired air heater and set it to run for 5 to 6 hours. The vessel cleared the A12 Bascule Bridge during its 1115 opening and headed south-east of Lowestoft at around 12kts. The two deckhands were on the aft deck, and at around 1230 one of them opened the port engine hatch to inspect the engine. Noticing a water leak, he asked the skipper to slow down and entered the engine compartment to rectify the leakage. The vessel continued on its original course at 3-4kts for the next 15 minutes **(Figure 1)**. The vessel's automatic identification system (AIS) track for 14 January was not available.

The skipper was sitting on the wheelhouse chair and the starboard access door for the wheelhouse was open **(Figure 2)**. At approximately 1245, he noticed a puff of grey smoke followed by black smoke from one or both of the demisting vents for the bridge window. Immediately afterwards, he saw thick black smoke issuing from an opening on the deck below the wheelhouse dashboard. This opening, which was reported to be around 15cm in diameter, was used to route the air circulation trunking from the diesel fired air heater that was located in a compartment directly below the wheelhouse.

The skipper brought both engines to neutral and ran towards the aft door of the wheelhouse to warn the two deckhands. At the door he turned around to assess the situation, and saw the entire forward console in flames and the wheelhouse beginning to fill with thick black smoke. Ordering one deckhand to launch the liferaft, he picked up a dry powder extinguisher located at the aft door and discharged it into the fire. He was unable to access the fire pump switch which was located on the console and his efforts to fight the fire were futile. He therefore left the wheelhouse via the aft entrance as black smoke and flames rolled along the deckhead.

Meanwhile, one deckhand climbed up to the top of the wheelhouse and released the portside liferaft. Having thrown it overboard, he inflated it and walked it to the stern of the vessel, bringing it up against the water-jet shield at the port transom. Both deckhands then boarded the liferaft, followed by the skipper who carried a search and rescue transponder unit (SART), a hand-held very high frequency (VHF) radio and a lifejacket, all of which had been stored near the aft entrance to the wheelhouse.

The crew cut the liferaft painter and used the paddles on the raft to move away. Initially they were blown back towards *ECC Topaz* but, with some effort, they were able to paddle to a safe position off the port side of the burning boat.

The crew set off distress flares from the liferaft while the skipper transmitted a "Mayday" message using the portable VHF radio. The skipper then activated the SART unit, and suspended it from the top of the liferaft canopy. At 1254, the master of the dredger *Arco Arun* reported to the coastguard that he could see black smoke and flames on the north-east horizon and that he was diverting his vessel to investigate. At 1259 *Arco Arun*'s master heard the "Mayday" call from *ECC Topaz* and 5 minutes later he saw the SART signal on his radar.

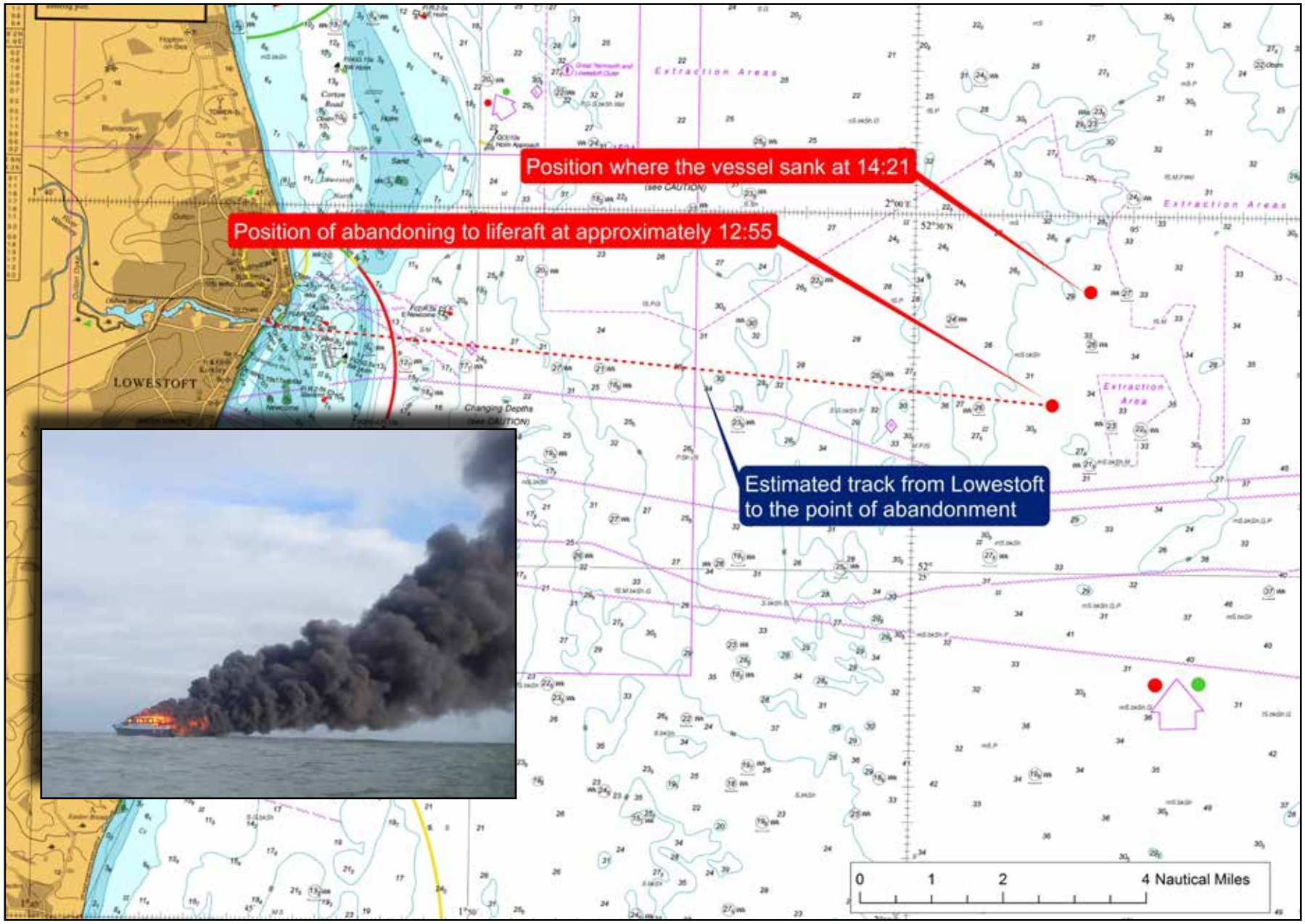

Figure 1: Approximate track of *ECC Topaz* with the position of the abandonment and sinking (inset: *ECC Topaz* on fire)

Figure 2: *ECC Topaz* in service (inset: Inside the wheelhouse/passenger space)

Arco Arun and the Royal Air Force (RAF) search and rescue helicopter based at RAF Wattisham both arrived at the liferaft at 1335. By 1348 all three men had been winched up into the helicopter and were en route to James Padgett hospital at Lowestoft to be assessed. They were all discharged later that day.

The Royal National Lifeboat Institution (RNLI) all weather lifeboat from Lowestoft reached *ECC Topaz* at 1346 and saw that it was burning quite intensely. The lifeboat remained in the area until 1420, when the burnt-out wreck sank in 33m of water. There were no signs of water pollution.

1.3 COMPANY, VESSEL AND CREW

1.3.1 Company

East Coast Charters Ltd was a family owned business set up in 2001 and based in Lowestoft, England. At the time of the accident, its fleet consisted of four catamarans, two of which were of glass reinforced plastic (GRP) construction and two of aluminium. The vessels were mostly chartered by companies in the offshore wind farm industry to transport personnel and stores. They were also used to service ships transiting the east coast, mainly to transfer crew and stores.

1.3.2 Vessel

ECC Topaz had been laid up since November 2013 and was due to be employed on a new charter the week following the accident. From 2011 to 2012, the vessel had been employed on several occasions servicing offshore wind farms.

Although *ECC Topaz* was quite similar in construction to *ECC Opal,* which had been delivered in June 2010, it was the only vessel in the fleet with water jet propulsion. Before *ECC Topaz* was laid up, the diesel engine driving the port water jet unit was reported to have been slowing when under load.

1.3.3 Crew

All the crew employed by East Coast Charters Ltd were UK nationals. Each vessel had its own crew and it was unusual for them to move between vessels. The company also hired skippers on a temporary basis to stand in when the regular skippers were unavailable.

On the day of the accident, the owner of East Coast Charters Ltd stood in for the regular skipper of *ECC Topaz.* The owner spent most of his time in the office managing the company, but he had 10 years' experience on vessels engaged in the wind farm industry. He held a *Master (Code Vessel)* certificate issued by the Maritime and Coastguard Agency (MCA) which qualified him to skipper vessels under 200gt (up to 150nm from a safe haven) and hold a watch on yachts and sail training vessels up to 500gt (unlimited). He had completed the mandatory basic safety training courses, including fire-fighting.

One of the deckhands was the owner's 23 year old son. The other had worked as a fishing vessel skipper in the past and had carried out some basic engineering maintenance on the East Coast Charter Ltd's vessels. Both deckhands had completed the mandatory basic safety training courses, including fire-fighting.

1.4 CONSTRUCTION

1.4.1 Blyth Workcats Ltd

ECC Topaz was constructed at Blyth Workcats Ltd, Canvey Island, England. Blyth Workcats Ltd was established in 1989 and had built 160 GRP vessels ranging from 10-20m in length. Nine of these were of the same class as *ECC Topaz* and in use in the offshore wind farm industry.

1.4.2 Construction details and stores/equipment location

ECC Topaz was built to *The safety of small workboats & pilot boats – a code of practice*, commonly known as the Brown Code. The vessel was delivered in June 2011 and operated as a Category 2 workboat, permitted to carry a maximum of 12 passengers and 2 crew members up to 60nm from a safe haven.

The generic design of this 14m workboat class was carried out by JB Marine Consultancy, who provided the structural drawings using the International Organization for Standardization (ISO) standard 12215-5[1] as a basis for the calculations. Wood was used extensively throughout the boat: marine grade plywood sheathed with fibreglass on the upper side was used for decks, softwood was used for longitudinal and transverse stiffeners, and balsa for wheelhouse panels. The engine compartment complied with the flame and smoke retardation requirement for such spaces as specified in the Brown Code.

Both hulls had five compartments, each divided by solid bulkheads **(Figure 3)**:

- Engine and propulsion jets were in the aft most compartment
- The fuel tanks in use at the time of the accident were immediately forward and inboard of the engine compartment
- The diesel fired air heater and a calorifier were in the third compartment
- The two subdivisions further forward were empty at the time of the accident.

Air circulation trunkings, and several electric cables including the cables for propulsion control, were routed through the starboard hull, emerging into the wheelhouse through an opening on the deck situated just under the navigation console.

The compartment containing the air heater was accessed through a hatch on the starboard deck outside the wheelhouse. In addition to the oil fired air heater, this compartment was used to store several sacks of cleaning rags, rolls of paper towels, 5 litres of diesel in a plastic container, and a few cans of lubricating and hydraulic oils.

[1] Small craft -- hull construction and scantlings -- Part 5: Design pressures for monohulls, design stresses, scantlings determination

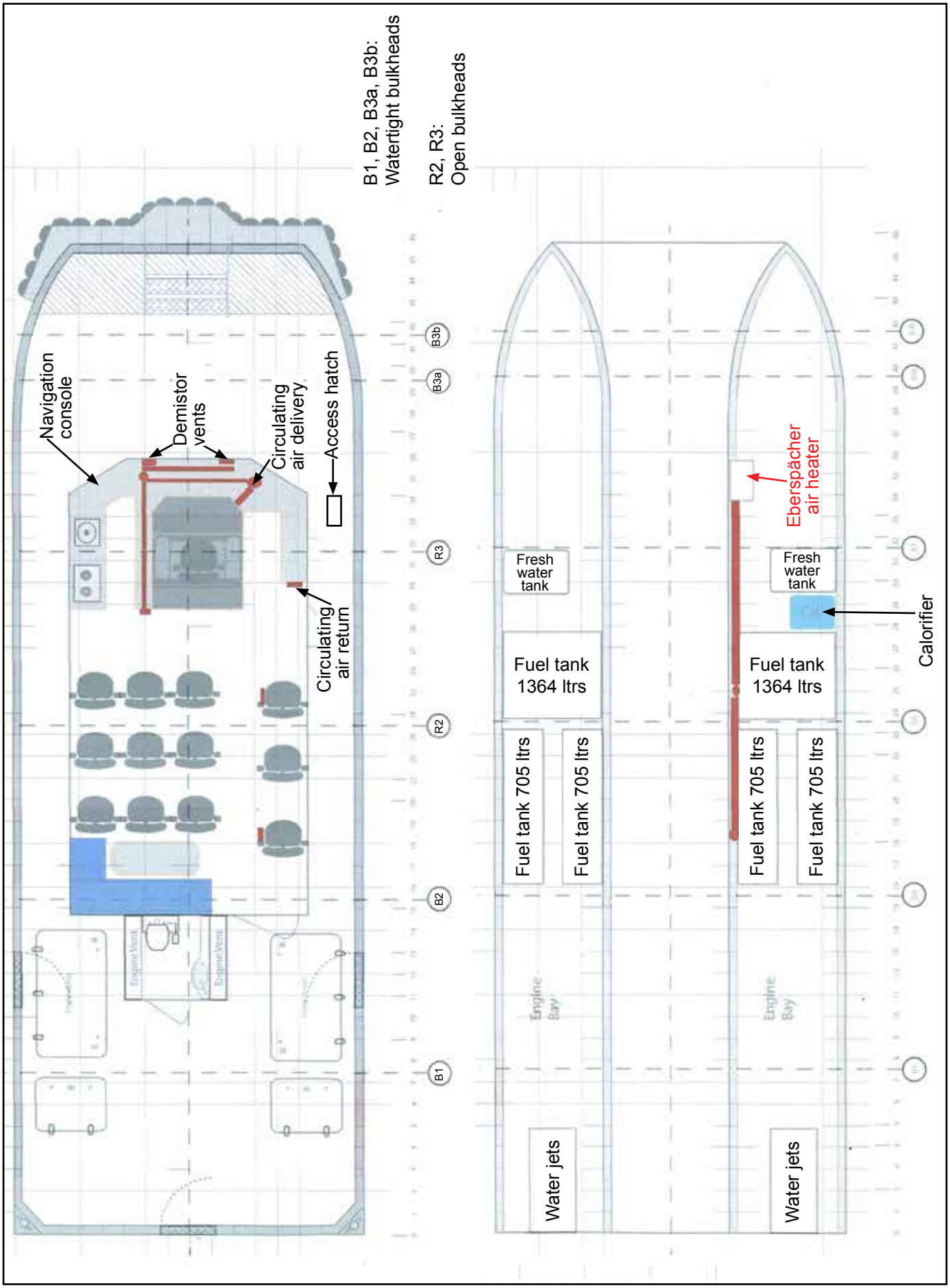

Figure 3: General layout of *ECC Topaz* showing the location of Eberspächer heater

1.4.3 Electrical system

Engine-driven alternators charged the battery bank, providing the 24v direct current (DC) supply for most of the equipment on board. Some equipment such as the electric toaster, microwave and cooker used 220v alternating current (AC) supplied through an inverter connected to the battery bank. The inverter was located near the aft door of the wheelhouse.

The calorifier required a 220v AC supply and was connected such that it could only be used when the vessel was connected to a shore power supply. The motors for the air heater and its fuel pump worked on 24v DC. The electrical junction box for the bridge window wiper motor was also located in the heater compartment.

1.5 HEATING SYSTEM

1.5.1 Heater supply

The heater fitted on board *ECC Topaz* was supplied by Eberspächer Climate Control Systems GmbH & Co. KG to Eberspächer (UK) Ltd, who then assembled a 'kit' consisting of the heater and all the components required to install the system. The 'kit' was delivered to Krueger Ltd, the main dealer for Eberspächer (UK) Ltd, who procured a 30mm internal diameter exhaust pipe from a third party supplier and delivered the package to Blyth Workcats Ltd. Blyth Workcats Ltd fitted and commissioned the system on the vessel before it was delivered to its owners in May 2011.

A large number of Eberspächer heaters are in use, the majority of them fitted to land-based vehicles. Approximately 600 marine units are installed in the UK every year, predominantly on small vessels including leisure yachts, workboats and small ferries.

1.5.2 Technical description

The air heater fitted on *ECC Topaz* was the Eberspächer Airtronic D4 Plus model which had a heat output capacity of 4kW **(Figure 4a)**. Its sequence of operation was as follows:

1. Heater switches on manually.

2. Heater fan starts at low speed and glow plug switches on.

3. After approximately 65 seconds, the fuel supply starts and the air fuel mixture starts burning in the combustion chamber.

4. The flame sensor detects the flame and the fan speed increases in proportion to the heat demand.

5. The glow plug switches off after 90 seconds.

6. The heat output is controlled in four stages by the reduction of the fan speed and fuel quantity.

7. When the desired temperature is reached, the fan is stopped after cutting off the fuel.

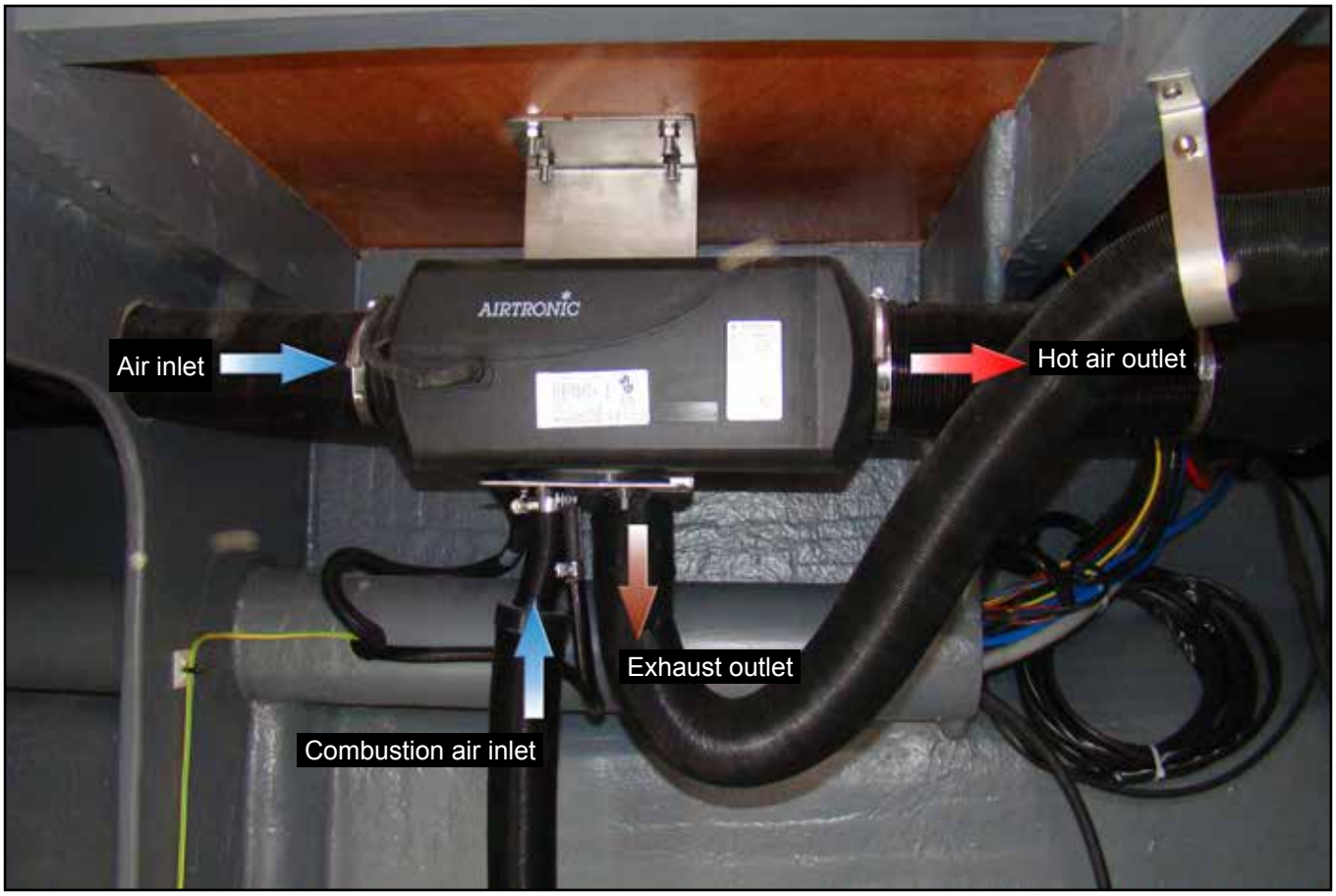

Figure 4a: Eberspächer (model D4 Plus) heater as installed in *ECC Opal*

The fuel consumption was 0.51 litre/hour at the maximum heat output. If the flame extinguished inadvertently for any reason, the fuel supply continued for approximately 65 seconds (depending on ambient temperature), and if no flame was detected at the end of this period, the fuel was cut off automatically.

The heat energy of the burning air fuel mixture was transferred to the circulating air, which was forced through a heat exchanger surrounding the combustion chamber. The heated air was delivered to several outlets in the wheelhouse, including the de-misting vents, via delivery trunking. The air for combustion was supplied through a separate inlet pipe that was open to the air heater compartment **(Figure 4b)**, the heated air was continuously recirculated through the delivery and suction trunking.

1.5.3 Exhaust pipe modification

At the end of 2010, an owner of a workboat similar to *ECC Topaz* complained to Blyth Workcats Ltd about seawater flowing back into the heater of his vessel through the exhaust pipe outlet, which was located just above the waterline. Blyth Workcats Ltd consulted Krueger Ltd, who provided them with a design to overcome the problem. The new design introduced a single walled inverted U-pipe of steel into the exhaust piping system, elevating it approximately 30cm above the main deck, thus preventing the flow of water back from the sea. The exhaust pipe from the heater was connected to one end of the U-pipe and the other end was connected to the exhaust outlet overboard stub pipe **(Figure 5)**. Although the section of the U-pipe exposed on deck was insulated, the length of pipe penetrating the deck was not.

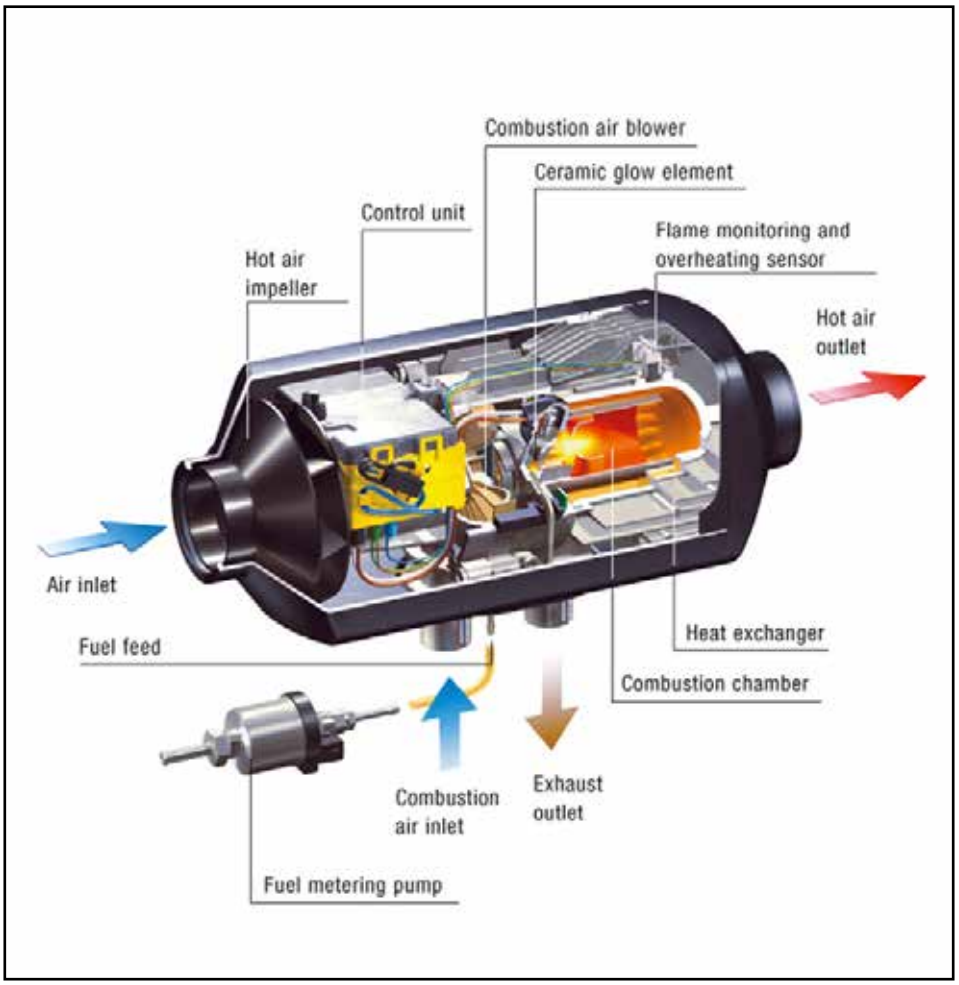

Figure 4b: Heater air and gas flows

All the 14m catamarans built by Blyth Workcats Ltd were subsequently fitted with the modified exhaust pipe design for the air heater. The requirement to maintain a 50mm diameter opening on deck was not adhered to in two other vessels similar to *ECC Topaz* **(Figure 5)**. Eberspächer was not consulted about the modification and was unaware of it until after this accident.

1.5.4 Exhaust pipe specification

The exhaust pipes of Eberspächer heaters fitted to land vehicles were uninsulated. Marine heaters were supplied by their dealers as complete kits, including the exhaust pipe, air trunking and fixtures. The exhaust pipe arrangement for marine systems consisted of an inner twin walled spiral-wound stainless steel pipe with a woven glass lagging and an aluminium over-sleeve, leading to the overboard stub pipe which was a double walled stainless steel pipe **(Figure 6)**.

The inner exhaust pipe supplied by Eberspächer UK (Ltd) was made by Westaflex and was the INOXMD type. The specification sheet for this exhaust pipe stated that it had a continuous temperature resistance less than or equal to 350°C and a temporary temperature resistance of 600°C **(Annex A)**.

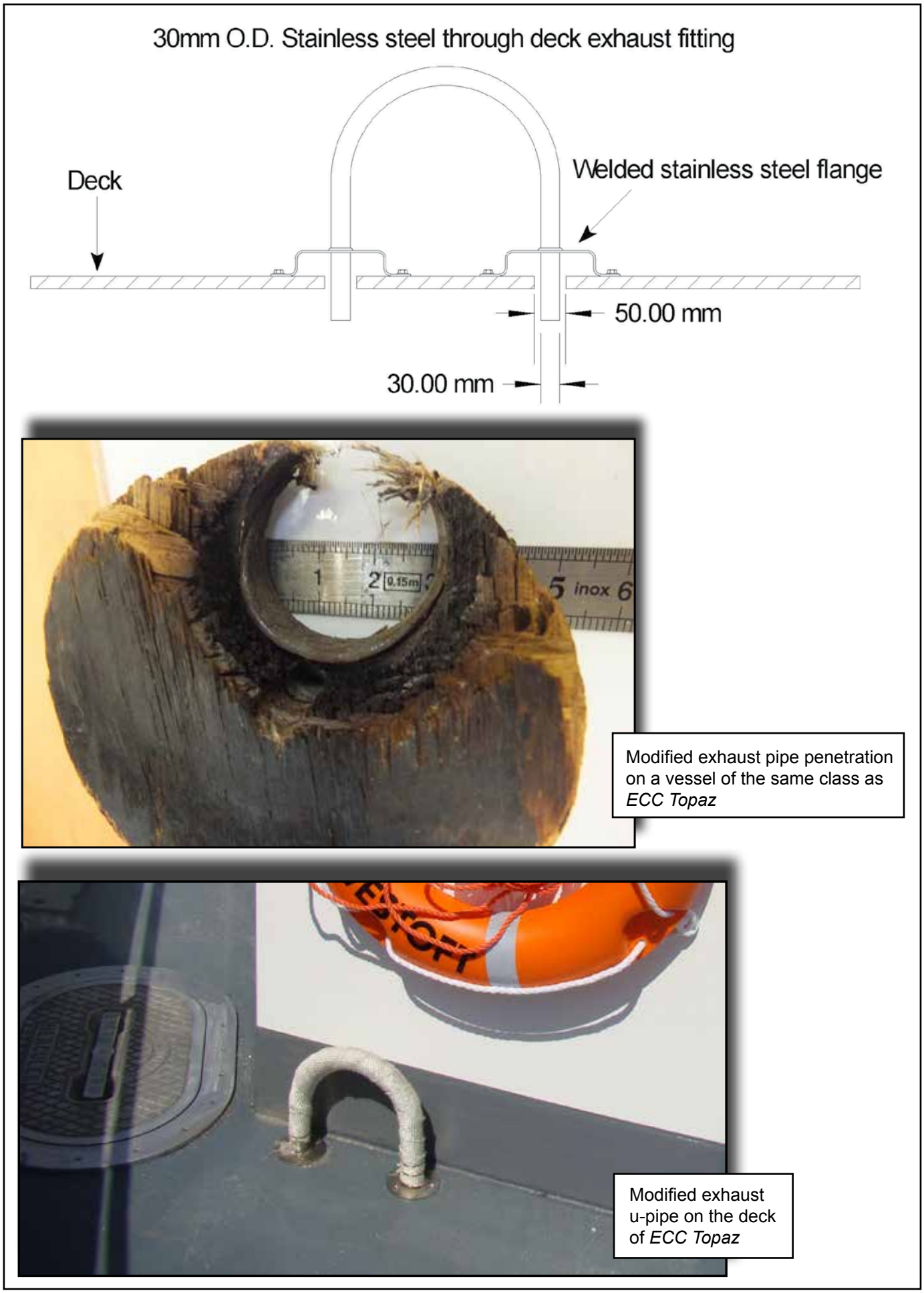

Figure 5: Modification to exhaust system

Figure 6: Exhaust pipe with insulation (inset: Double walled overboard discharge stub pipe)

Krueger Ltd, who supplied the Eberspächer kit for *ECC Topaz* included an exhaust pipe with the trade name 'Kopex'. Its technical specification was similar to the original Westaflex pipe and it also had an internal operating temperature of 350ºC **(Annex B)**.

1.5.5 Instruction manuals and warranty

The heater was dispatched from Germany with an operating and installation manual in a compact disc format. A hard copy of a marine installation manual was added to the 'kit' in the UK along with a warranty pack.

The warranty pack should have included an additional 'Recommended Service Schedule' **(Figure 7)**. It was not possible to establish if *ECC Topaz* had received this maintenance schedule along with the warranty pack but the MAIB has confirmed that this schedule was not sent to four other workboats operated by another company in the wind farm sector.

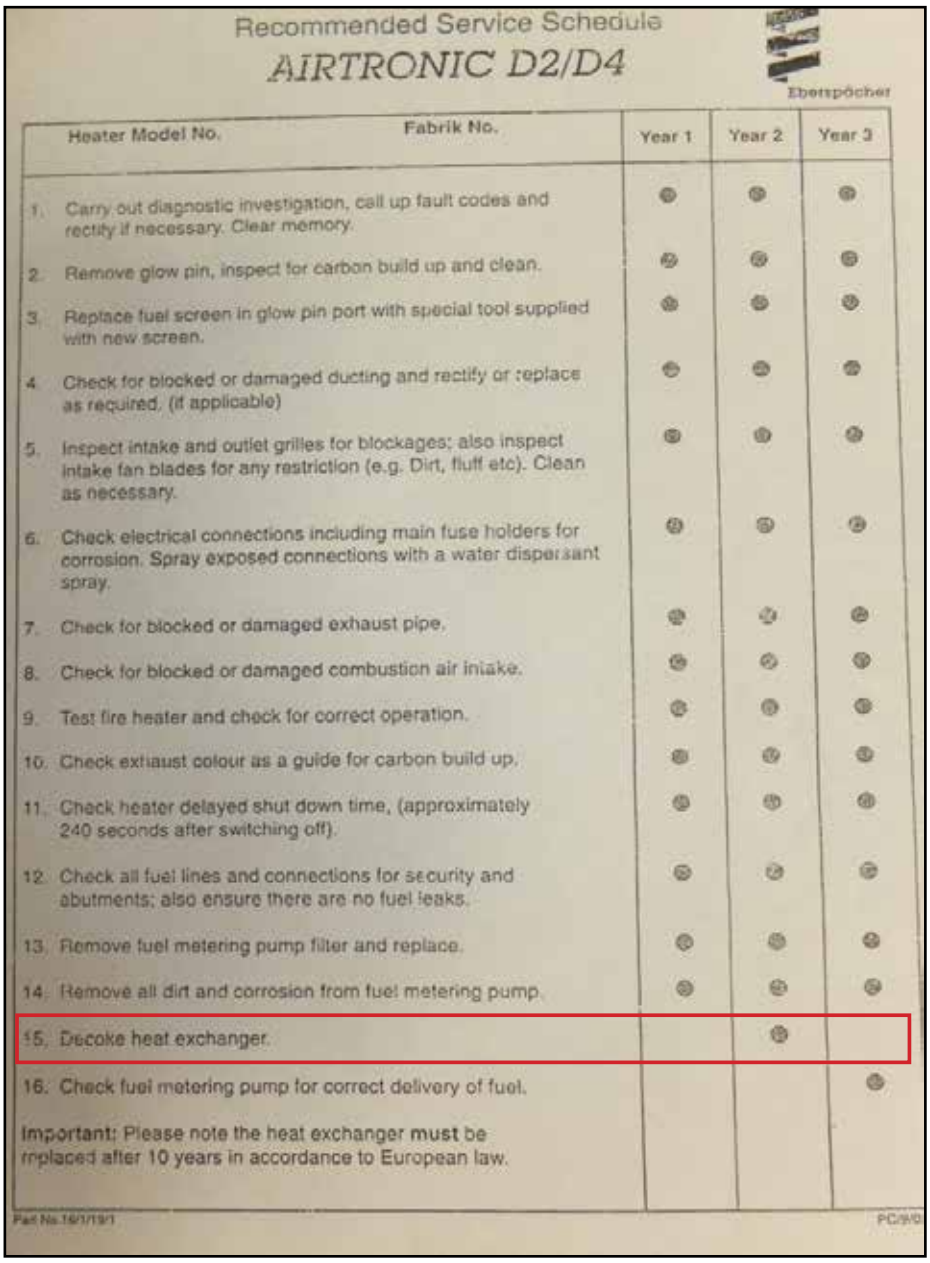

Recommended Service Schedule

AIRTRONIC D2/D4

Eberspächer

Heater Model No. Fabrik No.	Year 1	Year 2	Year 3
1. Carry out diagnostic investigation, call up fault codes and rectify if necessary. Clear memory.	●	●	●
2. Remove glow pin, inspect for carbon build up and clean.	●	●	●
3. Replace fuel screen in glow pin port with special tool supplied with new screen.	●	●	●
4. Check for blocked or damaged ducting and rectify or replace as required. (if applicable)	●	●	●
5. Inspect intake and outlet grilles for blockages; also inspect intake fan blades for any restriction (e.g. Dirt, fluff etc). Clean as necessary.	●	●	●
6. Check electrical connections including main fuse holders for corrosion. Spray exposed connections with a water dispersant spray.	●	●	●
7. Check for blocked or damaged exhaust pipe.	●	●	●
8. Check for blocked or damaged combustion air intake.	●	●	●
9. Test fire heater and check for correct operation.	●	●	●
10. Check exhaust colour as a guide for carbon build up.	●	●	●
11. Check heater delayed shut down time, (approximately 240 seconds after switching off).	●	●	●
12. Check all fuel lines and connections for security and abutments; also ensure there are no fuel leaks.	●	●	●
13. Remove fuel metering pump filter and replace.	●	●	●
14. Remove all dirt and corrosion from fuel metering pump.	●	●	●
15. Decoke heat exchanger.		●	
16. Check fuel metering pump for correct delivery of fuel.			●

Important: Please note the heat exchanger **must** be replaced after 10 years in accordance to European law.

Part No.19/1/19/1 PC3/0

Figure 7: 'Recommended Service Schedule' included with warranty pack

The operation manual contained extensive troubleshooting and repair instructions. Under 'Maintenance Instructions', there were three bullet points of instructions to the user to:

- Switch on the heater once a month even if heating was not required.
- Carry out a trial run before the season when heating was required.
- Check or clean the combustion air supply and exhaust system openings after longer periods when the heater had not been used.

It did not make any reference to the separate service schedule inserted in the warranty pack. Only the installation manual was on board *ECC Topaz* at the time of the accident.

The installation manual explicitly stated that flammable items, including fuel canisters, oil cans, cleaning rags and paper rolls must not be stored or transported on or next to the heater. The manual also required the flexible exhaust to be routed *giving clearance and consideration to heat sensitive components…* A distance of 300mm was recommended as the minimum height of the overboard discharge above the waterline **(Figure 8)**.

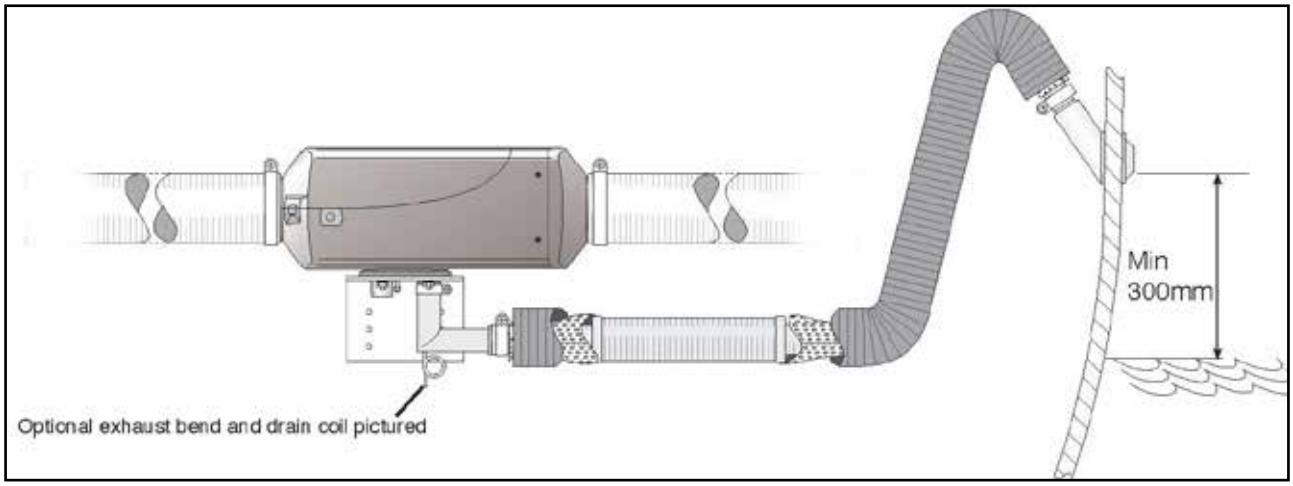

Figure 8: Manufacturer's recommended installation method

1.5.6 Maintenance and repair

The crew of *ECC Topaz* carried out no maintenance on the air heater. The only time they saw the heater was when they entered the heater compartment to access the items stored there. Immediately after the accident, MAIB inspectors went on board *ECC Opal*, another 14m catamaran built by Blyth Workcats Ltd for East Coast Charters Ltd. The supply air trunking was found to have come adrift **(Figure 9)**.

In September 2012, Panks Auto Electrical and Components, the Eberspächer (UK) Ltd agent in Norwich, was called out to repair the space heater unit on *ECC Topaz*. The technician who attended found heavy carbon build-up in the burner and heat exchanger, and had to replace several parts including the burner, glow plug and upper casing. He also found that the exhaust pipe was either degraded or cracked and, as he did not have a 30mm diameter exhaust pipe with him, he offered to return

Figure 9: Air circulation delivery trunking on *ECC Opal*

with the correct pipe and insulating material to complete the job. The owners of East Coast Charters Ltd told him that their crew would fit the pipe and asked him to supply 1 metre of 30mm exhaust pipe without insulation. There was no evidence to establish if this pipe was ever fitted.

1.5.7 Dealer accreditation system

Towards the end of 2013 Eberspächer Climate Control Systems GmbH & Co. KG started a dealer accreditation system designed to ensure that all their dealers were fully qualified to install, commission and service the company's heaters. In a section dealing with fault finding, the accreditation course material states:

> *If the heater is full of carbon, ask why?*
>
> *Is the blower motor air gap correct? Is the blower motor turning at the correct RPM? Is the fuelling correct? … Could the fuel system have an air leak? Is the combustion air system clear? Is the exhaust clean, clear and within specification? Is the heater running predominantly in its lower heat levels?*

Similar learning points were also made in connection with the glow plug.

1.5.8 Tests carried out

Tests were conducted at Eberspächer (UK) Ltd's facilities at Ringwood in the UK to establish the maximum expected exhaust temperatures from a D4 Plus unit and also to understand the period of time that diesel would continue to be injected in the event of flame interruption. It was established that the exhaust temperature of a brand new heater could rise to around 440°C **(Figure 10a)**. These results were

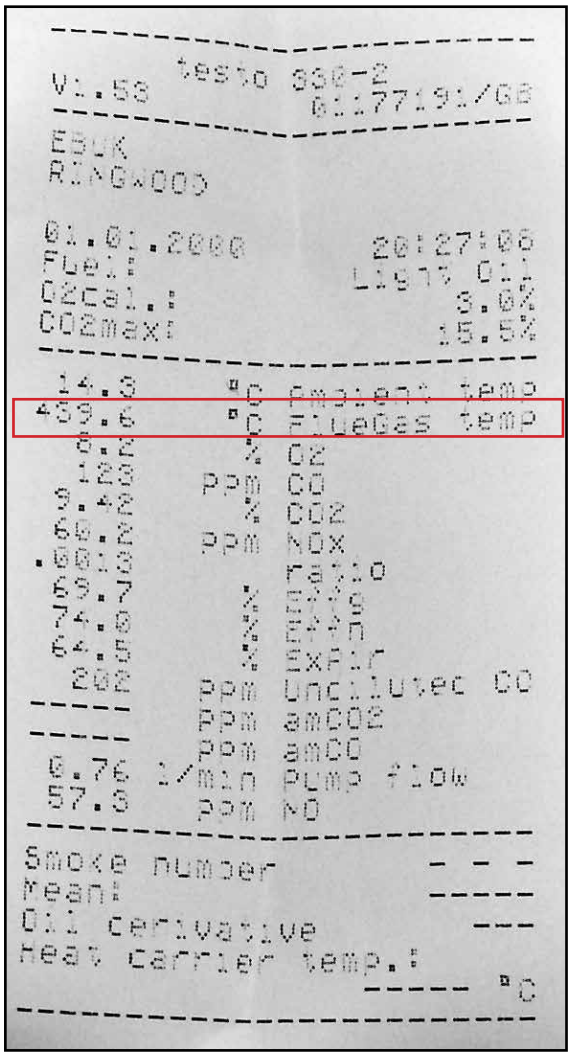

Figure 10a: Print out of heater parameters during tests carried out at Eberspächer (UK) facilities

corroborated further with data supplied by Eberspächer Climate Control Systems GmbH & Co. KG, **(Figure 10b)**, who also reported that the surface temperature of an uninsulated heater exhaust pipe, 5cm away from the heater, was measured at 292ºC.

1.6 FIRE-FIGHTING AND LIFE SAVING APPLIANCES

ECC Topaz was fitted with one battery-operated smoke sensor fitted in the wheelhouse. A fire blanket and two dry powder extinguishers were available in the wheelhouse and the engine bays were each protected by 60 litre dry powder extinguishers, which were automatically activated by a heat sensitive quartz bulb in the event of fire. The vessel was also fitted with an electrically-driven fire pump with two fire hydrants on deck.

ECC Topaz carried two liferafts, each of 8 persons capacity, an emergency position indicating radio beacon (EPIRB) and a search and rescue transponder (SART). The EPIRB did not activate when the vessel burnt and foundered.

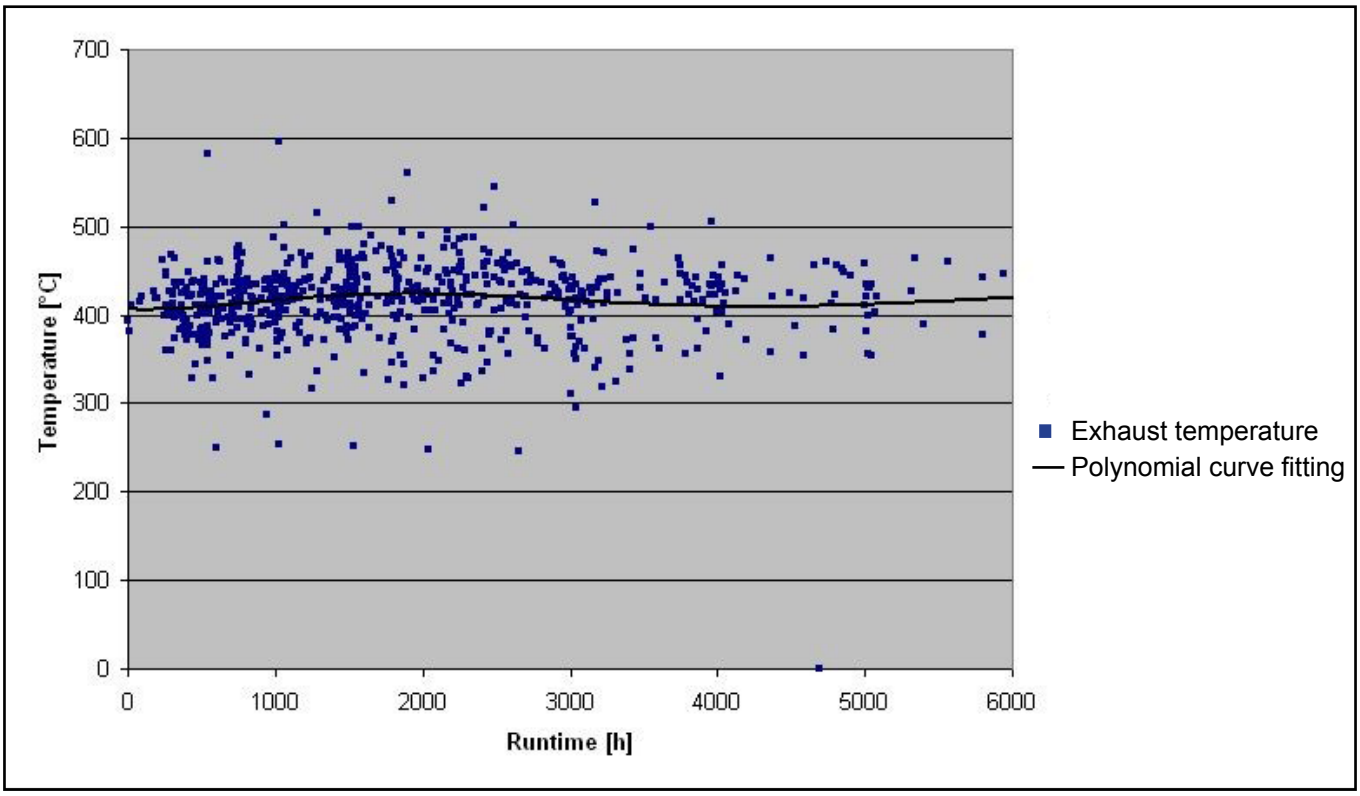

Figure 10b: Exhaust temperatures measured by Eberspächer at the outlet of several models of Airtronic D4 heaters

1.7 RISK ASSESSMENT AND METHOD STATEMENTS

The risk assessment for *ECC Topaz* contained a section on fire hazards with all the potential risks relating to injury to people considered. A lack of adequate smoke detectors had been identified as a 'potential hazard', with the 'hazard effect' being fatality and extensive damage. The control measure identified to minimise this risk was the fitting and 'adequate maintenance' of smoke detectors.

East Coast Charters Ltd maintained written method statements for five operations including transfer of crew, manual handling and mooring operations. There were no method statements on the maintenance or upkeep of the air heaters.

1.8 GUIDANCE ON HEATERS AND FIRE SAFETY

1.8.1 EU Directive

Directive 2001/56/EC of the European Parliament and of the Council of 27 September 2001 relating to heating systems for motor vehicles and their trailers laid out the requirement for road vehicle heaters. Although the Directive included detailed guidance on heater installation, the subjects of, air quality and exhaust emissions, exhaust pipe temperatures and insulation were not discussed. The use of these heaters in the marine environment was not mentioned in this Directive.

1.8.2 International Organization for Standardization

At the time this report was written, the International Organization for Standardization (ISO) was in the process of finalising *ISO Standard 14895: Small craft – Liquid-fuelled galley stoves and heating appliances*. The draft standard required

heater manufacturers to specify service intervals in the boat owner's manual and stated:

> *Heaters shall be installed so that outgoing products of combustion pass though sealed ductwork terminating outside the craft.*

The fire hazards of poorly insulated exhaust pipes, storage of inflammable material near heaters and proper securing of air circulation trunking were not explicitly mentioned in the draft standard.

1.8.3 UK Regulations

Section 14.1.1.2 of the Brown Code, which refers to fire safety in machinery spaces of vessels of GRP construction, states:

> *Machinery space boundaries should prevent the passage of smoke and flame for 15 minutes …*

The section contained guidance on fabrication techniques for GRP that gave the material a degree of fire resistance sufficient to meet this requirement. The Code further stated that smoke and/or heat detectors, as appropriate, should be fitted in machinery spaces. Furthermore, flammable materials not required for the operation and maintenance of machinery were not to be stored in machinery spaces. In the section dealing with the provision for fire extinguishing in machinery spaces, the Brown Code referred to the *Merchant Shipping (Fire Protection) Regulations 1980 and 1984* wherein a machinery space is defined as:

> *a space which contains propulsion machinery, boilers, oil fuel units, steam and internal combustions engines, generators and major electrical machinery, oil filling stations, refrigerating, stabilising, ventilation and air condition machinery…*

The Brown code is currently being revised and will be published as '*The Safety of small workboats and pilot boats – a code of practice*', edition 2. It will be known as 'The Workboat Code'

1.9 FLAMMABILITY AND IGNITION

Most solids, when subjected to high temperatures, undergo pyrolysis which is an irreversible chemical process that releases flammable vapours from the solid. The auto-ignition or self-ignition temperature of a substance is the minimum temperature at which these vapours will ignite under normal atmospheric conditions, without the need for an external source of ignition such as a flame or spark. The auto-ignition temperature has been found to be variable and depends on several factors such as the time period of heat application and the rate of rise of external temperature. Thermal and ignition properties of plywood are roughly similar to that of whole wood.

The mode of heat transfer, whether radiation through the air or conduction by direct contact also has a direct effect on the time taken to attain auto-ignition temperatures. The rate of heat dissipation is another important factor to consider when determining how soon something may ignite. If the rate of heat dissipation exceeds the rate of heat generation, ignition may not occur.

The flash point of a volatile material is the lowest temperature at which it gives vapour that can be ignited by an external source.

Table 1[2] contains commonly accepted auto-ignition and flash point temperatures of some of the material stored in the heater compartment of *ECC Topaz.*

Material	Auto-ignition point ºC	Flash point ºC
Wood (including marine grade plywood)	250-300	-
Cotton	230-270	-
Paper	Same as its wood source	-
Marine gas oil	338	>66
Lubricating oil (mineral oils)	225-370	90 - 199

Table 1: Commonly accepted auto-ignition and flash point temperatures

1.10 INSPECTIONS, SURVEYS AND AUDITS

ECC Topaz was built under the supervision of an independent commercial vessel surveyor authorised to conduct surveys on behalf of the Society of Consulting Marine Engineers & Ship Surveyors (SCMS) and Mecal Ltd. The vessel was surveyed in June 2012 and June 2013 by the same surveyor.

In August 2013 the general manager of East Coast Charters Ltd carried out an internal audit on board the vessel. The audit report contained remarks on missing company procedures and out of date fire extinguishers.

In November 2013, an inspection of *ECC Topaz* was carried out by a surveyor working on behalf of London Offshore Consultants (LOC) in accordance with the guidelines from The International Marine Contractors Association (IMCA), a trade association representing offshore, marine and underwater engineering companies. The survey report, in the format of IMCA's *common marine inspection document* (CMID), consisted of detailed checklists and questionnaires exceeding 30 double sided A4 sheets. In the section of the report entitled Machinery and Electrical, there were 23 check points including checks on diesel engines, batteries and electrical systems. The report stated:

> *All the equipment and documentation was in good order and there were no recommendations to be made by the surveyor.*

[2] Source: Ignition Handbook, by Vyetnis Babrauskas, Fire Science Publishers*, 2003.*

Neither the air heater nor the compartment in which it was located were checked during any of the surveys, audits or inspections carried out on the vessel.

1.11 SCORCHING AND CHARRING INCIDENTS

A few days after the accident, the MAIB received information that crews of other 14m Blyth Workcats Ltd vessels had observed signs of scorching and charring at the deck penetration of the modified section of the air heater exhaust pipe. **Figures 11a** and **11b** show the condition of the underside of the plywood deck in the diesel generator compartment of two vessels similar to *ECC Topaz*. The heater exhaust pipes in all these vessels were subsequently modified by Blyth Workcats Ltd, so that the insulated exhaust pipe was continuous from the heater outlet to the overboard discharge.

1.12 PREVIOUS ACCIDENTS

The MAIB has no records of fires involving oil fired air heaters on board wind farm support vessels or any other vessel type. The MAIB has investigated three cases of fire and explosion on vessels of GRP construction. Two of these were engine space fires and one was an explosion caused by leaking liquid petroleum gas.

Figure 11a: Scorched condition of deck underside on a 14m Blyth workboat with insulated deckhead

Figure 11b: Scorched condition of deck underside on a 14m Blyth workboat with - uninsulated deckhead

SECTION 2 - ANALYSIS

2.1 AIM

The purpose of the analysis is to determine the contributory causes and circumstances of the accident as a basis for making recommendations to prevent similar accidents occurring in the future.

2.2 ACCIDENT OVERVIEW

It is almost certain that the fire on board *ECC Topaz* originated in the starboard hull in the compartment directly below the wheelhouse where the diesel fired air heater was located. The likelihood of the fire having started in an engine compartment is considered very low since the port engine hatch was open at the time of the accident and both engine bays were protected by automatically discharging fire extinguishers and a fire retardant coating. Additionally, two solid bulkheads separated the engines from the heater compartment and the compartments forward of the wheelhouse were also separated by solid bulkheads and contained no combustible materials or likely sources of ignition. Had the fire originated in the engine space, it would have certainly emerged elsewhere before burning though the solid bulkheads and breaking out into the wheelhouse.

The skipper became aware of the fire when he saw grey smoke from the demisting vent and thick black smoke issuing out of the conduit opening on the wheelhouse deck. Within the time that it took him to bring the engine to neutral and reach the aft door, the wheelhouse console was already aflame. This indicates that the fire had developed undetected for an unknown period of time before breaking through the plywood and entering the wheelhouse where it was exacerbated by the fresh air coming through the open starboard door. Therefore, it is not surprising that the skipper was unable to control what was a well-established fire with a portable fire extinguisher, and was forced to take the only option remaining to him, which was to abandon the vessel with his crew.

2.3 SOURCE OF FIRE

2.3.1 Heater malfunction or electrical fire

Eberspächer heaters had an excellent safety record. In spite of the large number of such heaters in use both on land and on board small vessels, there are no records of fires or accidents having occurred due to their malfunctioning. Moreover, these heaters are well protected by overheat and flame failure shutdowns. It is therefore considered very unlikely that the fire was caused by either a mechanical or electrical defect in the heater.

The calorifier was the only other equipment in the heater compartment potentially capable of starting a fire. However, as it could only be powered while in port, this possibility has also been ruled out.

2.3.2 Uninsulated section of modified exhaust pipe

Tests conducted by Eberspächer established that the temperature of the exhaust gas at the outlet of a brand new D4 Plus heater working at full capacity, was around 440ºC. On the day of the accident, the starboard side door on the wheelhouse of

ECC Topaz was left open. Therefore, the recirculating air passing through the heater would have been continuously replenished with cold air. This would have caused the heater to run continuously at its maximum capacity from the time that it was switched on that morning.

The service agent who attended *ECC Topaz* 16 months after it was delivered, found heavy carbon build-up in the burner and heat exchanger. He did not identify or rectify the root cause of this carbon build-up and so, assuming a similar usage pattern over the next 14 months, it is highly likely that a similar level of carbon build-up would have occurred. This would have resulted in a significant reduction in the heat transfer efficiency of the heater, causing hotter than usual combustion gases to flow directly to the exhaust pipe. The uninsulated exhaust pipe would have transferred this heat to the plywood under deck, eventually causing it to reach its auto-ignition temperature of 250-300ºC and burn. It is possible that an ember from this burning plywood dropped down and ignited the paper or other flammable material stored in the compartment. Burning damage on the plywood underdeck caused by the uninsulated exhaust pipe on two other vessels similar to *ECC Topaz,* is compelling evidence that the uninsulated section of the exhaust pipe was the cause of the fire.

Although the exhaust pipe modification solved the original water ingress problem, it was not authorised by the manufacturer and introduced a fire hazard by neglecting to assess the potential fire risk. Furthermore, the close contact between the uninsulated pipe and the deckhead caused by neglecting to adhere to the 50mm opening as required by the original design exacerbated this risk. Considering that the auto-ignition temperature of the plywood underdeck was well below 440ºC, and that the compartment had very few openings through which to dissipate heat, the heat transferred from the uninsulated section of the exhaust pipe to the plywood in the 3 hours after the heater had been switched on that morning, would have been sufficient to start a fire.

2.3.3 Degraded exhaust pipe

The original exhaust pipe on *ECC Topaz* was found to be in a poor and brittle condition by the service engineer who attended the vessel in September 2012. It could not be established if the length of exhaust pipe purchased by East Coast Charters Ltd in September 2012 as an intended replacement was ever fitted. If the damaged section had not been replaced, it would have further deteriorated in the 14 months that followed. Even if the pipe had been replaced, it is unlikely to have been properly insulated as insulation material was not purchased by East Coast Charters Ltd.

Had there been a leak of combustion gas from the exhaust, it cannot have been severe since the heater drew combustion air from the space which, had it filled with exhaust gases, would eventually have suffered flame failure due to oxygen starvation. Nevertheless, the direct impingement of hot exhaust gas on to the plywood under-deck or on to flammable substances stored in the compartment would have been sufficient to start a fire if the oxygen level was sufficient to support combustion.

2.3.4 Mismatched specification of exhaust pipe

The exhaust pipes supplied by Eberspächer (UK) Ltd and Krueger Ltd were designed for a sustained internal temperature not exceeding 350ºC. The degradation of the exhaust pipe observed on board *ECC Topaz* after only 16 months in service, may indicate that the supplied exhaust pipes were not suitable for the sustained high temperatures experienced in operation. There was a mismatch between the specification of the exhaust pipes in use and the heat output of the Eberspächer D4 Plus heater.

It is possible that other vessels are operating with degraded exhaust pipes as well. However, it is hard to monitor the condition of these pipes because the heaters are normally installed in compartments with poor access, and the glass wool insulation and outer sleeve normally fitted would further obscure any damage.

2.4 AIR HEATER REGULATIONS

2.4.1 The Brown Code

Very little fuel was delivered to the burner of the air heater on *ECC Topaz*. However, the temperature of the exhaust exceeded that of many diesel or petrol engines and it is clear that this presented a significant fire risk. This risk was ignored during the construction of the vessel, the two annual inspections, the CMID survey and the internal audit because the Brown Code to which *ECC Topaz* was built, and the current Workboat Code, make no mention of air heaters. The requirements relating to fire safety in the Brown Code are restricted to machinery spaces, and since the heater was not recognised as machinery it was not considered to pose a fire risk.

The Brown Code referred to the *Merchant Shipping (Fire Protection) Regulations 1980 and 1984* where the definition of a machinery space included spaces that contain ventilation and air conditioning machinery. However, in the absence of explicit guidance to include oil fired air heaters within this definition, the fire risks posed by these heaters have been overlooked.

By the time the skipper became aware of the fire, it had already spread beyond control. Within a few seconds of the smoke coming from the demisting vent, the flames broke through and set the wooden console ablaze. This indicates that the fire in the space below, probably fed with fresh air from a disconnected or burnt out air circulation trunking and fuelled by the flammable material in the compartment, was well established before it entered the wheelhouse. The crew would have been unable to tackle the seat of the fire because the only access was through the hatch on deck; opening this would have been both unwise and unsafe when the fire was already raging inside the wheelhouse.

In addition to fire protection and extinguishing, the Brown Code requires machinery spaces to be equipped with appropriate smoke or heat detectors. In this case, the skipper's attention was caught by a puff of greyish smoke from the demisting vent at the bridge window. It is possible that, as in *ECC Opal,* the air circulation discharge trunking had come adrift or might have burnt through, and some of the large volume of smoke filling the air heater compartment made its way through the open trunking and into the wheelhouse. The skipper might not have smelt the smoke earlier

because the wheelhouse door was open. Had he been alerted to the fire earlier, he could have taken steps to prevent its spread by switching off the air heater fan to starve the fire of oxygen, and starting the fire pump to carry out boundary cooling.

2.4.2 ISO 14895: Small Craft – Liquid-fuelled Galley Stoves and Heating Appliances

The draft ISO standard has addressed some of the issues regarding the safety of oil fired air heaters. However, it does not cover the hazards associated with poorly insulated exhaust pipes, storage of inflammable material near heaters and adequate securing of air circulation trunking.

As the benchmark against which air heaters will be built in the future, it is important that this standard, in its final published form, addresses all the relevant safety issues associated with them, including a requirement to provide maintenance/inspection routines.

2.5 MAINTENANCE

The operation manual for the D4 plus heater contained very little guidance on inspection and maintenance, but a separate sheet of paper detailing the '*Recommended Service Schedule'* was included in the warranty pack **(Figure 7)**. However, the MAIB investigation established that the warranty packs supplied to other vessels fitted with the D4 plus heater did not contain the service schedule. It is therefore possible that the schedule had also not been supplied to the *ECC Topaz.*

Had this '*Recommended Service Schedule'* been followed, the heater would have been serviced annually, avoiding the carbon build-up that caused it to fail 14 months prior to the accident. It would also have provided an opportunity for a technician to service the system again 2 months before the accident, and this might have identified further carbon build-up and any issues regarding the exhaust or air trunking.

2.6 ABANDONMENT AND RESCUE

It was fortunate that one of the deckhands was able to climb up on the wheelhouse and release the liferaft as the vessel's starboard side was already engulfed by smoke and flames. The skipper's action in carrying the SART unit and the portable VHF radio with him before abandoning helped him to transmit a "Mayday" message without delay.

The air rescue was timely and effective and the crew were fortunate that the accident happened near the coast, during the day and in benign environmental conditions. It was also fortunate that there were no passengers on board at the time of the accident as launching both liferafts with the wheelhouse on fire, while keeping the passengers out of danger until they were able to abandon the vessel safely, would have been challenging.

SECTION 3 - CONCLUSIONS

1. It is almost certain that the fire on board *ECC Topaz* originated in the starboard hull compartment directly below the wheelhouse where the diesel fired air heater was located [2.2]

2. Eberspächer heaters are well protected by safety features and despite the large numbers in use there are no records of the heaters causing fires. It is therefore considered very unlikely that the fire was caused by an electrical or mechanical malfunction in the heater. [2.3.1]

3. The unauthorised modification of the heater exhaust pipe resulted in the introduction of an uninsulated section of exhaust pipe that would have transferred heat to the plywood under deck, eventually causing it to burn. [2.3.2]

4. It is possible also that the exhaust pipe of the heater on board *ECC Topaz* was degraded to a point where it was leaking. Had this been the case, the direct impingement of hot exhaust gas, on to the plywood under-deck or onto flammable substances stored in the heater compartment, would have been sufficient to start a fire if the oxygen level was sufficient to support combustion. [2.3.3]

5. It is possible that other vessels are operating with degraded exhaust pipes as well. [2.3.4]

6. The requirements relating to fire safety in the Brown Code are restricted to machinery spaces, and since the heater was not recognised as machinery, it was not considered to pose a fire risk. [2.4.1]

7. The heater space was not fitted with a smoke detector and therefore the skipper did not have any warning that a fire had started. Had he been alerted earlier, he could have taken steps to prevent the spread of fire. [2.4.1]

8. Had the 'Recommended Service Schedule' schedule been followed, the heater would have been serviced annually, and this might have identified further carbon build-up and any issues regarding the exhaust or air trunking. [2.5]

SECTION 4 - ACTION TAKEN

4.1 MAIB ACTIONS

The MAIB has:

- In February 2014, issued a safety bulletin **(Annex C)** informing the industry of the accident and warning them of the fire hazard posed by uninsulated exhaust pipes.
- Published a safety flyer **(Annex D)** to disseminate the main lessons of this accident in the leisure boating sector.

4.2 ACTIONS TAKEN BY OTHER ORGANISATIONS

The Maritime and Coastguard Agency has:

Agreed changes with the Workboat Code Edition 2 working group, to ensure that in Edition 2:

- Spaces within which liquid fuelled heaters are fitted are designated as machinery spaces, treated as areas at risk from fire and are fitted with fire detectors and the means to fight a fire in the space.
- The following information is held on board:
  - Instructions to read the heating appliance owner's manual
  - Instructions to ensure the heater's cool down cycle is not interrupted
  - Instructions for turning off the heater's fuel supply if a manual valve is fitted
  - Instruction for refuelling and the type of fuel used
  - Service interval specifications, if required
  - Warnings and cautions with at least the following information:
    - Heater exhaust components maybe hot during and directly after heater operation
    - Ensure exhaust outlets are not obstructed while heater is in operation
    - The air temperature at heater outlet maybe hot
    - Ensure all heater outlets or intakes are kept clear during heater operation
- Installation of exhaust systems conforms strictly to the equipment manufacturer's guidance such that the surrounding structure is suitably protected and allows for the dissipation of heat.

The Royal Yachting Association has:

- Agreed to facilitate wide dissemination of the MAIB safety flyer on this accident within the leisure boating sector.

Eberspächer (UK) Ltd has:

- Ensured that the unauthorised exhaust pipe modifications on the affected work boats have been rectified by their main dealer.

Blyth Workcats Ltd has:

- Issued a bulletin to the owners of all the vessels that may be affected by the heater exhaust pipe modification.

British Marine Federation, **with heater manufacturers and other members of the technical committee working group for ISO Standard 14895, has:**

- Amended the draft ISO standard 14895 to include reference to the fire risks from uninsulated exhaust pipes and the storage of flammable substances near heaters. The requirement for secure fixtures for circulating air trunkings has also been addressed. The draft standard also requires the provision of maintenance/inspection instructions for all oil fired heater installations.

SECTION 5 - RECOMMENDATIONS

Eberspächer (UK) Ltd is recommended to:

2015/107 Investigate the discrepancy between the temperature rating of the exhaust pipe supplied with their air heaters and the actual temperature of the exhaust gas.

Blyth Workcats Ltd is recommended to:

2015/108 Ensure, while vessels are under construction in their yard, that any modifications to equipment fitted are authorised and approved by the relevant equipment manufacturer.

Safety recommendations shall in no case create a presumption of blame or liability

Specification sheet for exhaust pipe supplied by Eberspächer (UK) Ltd

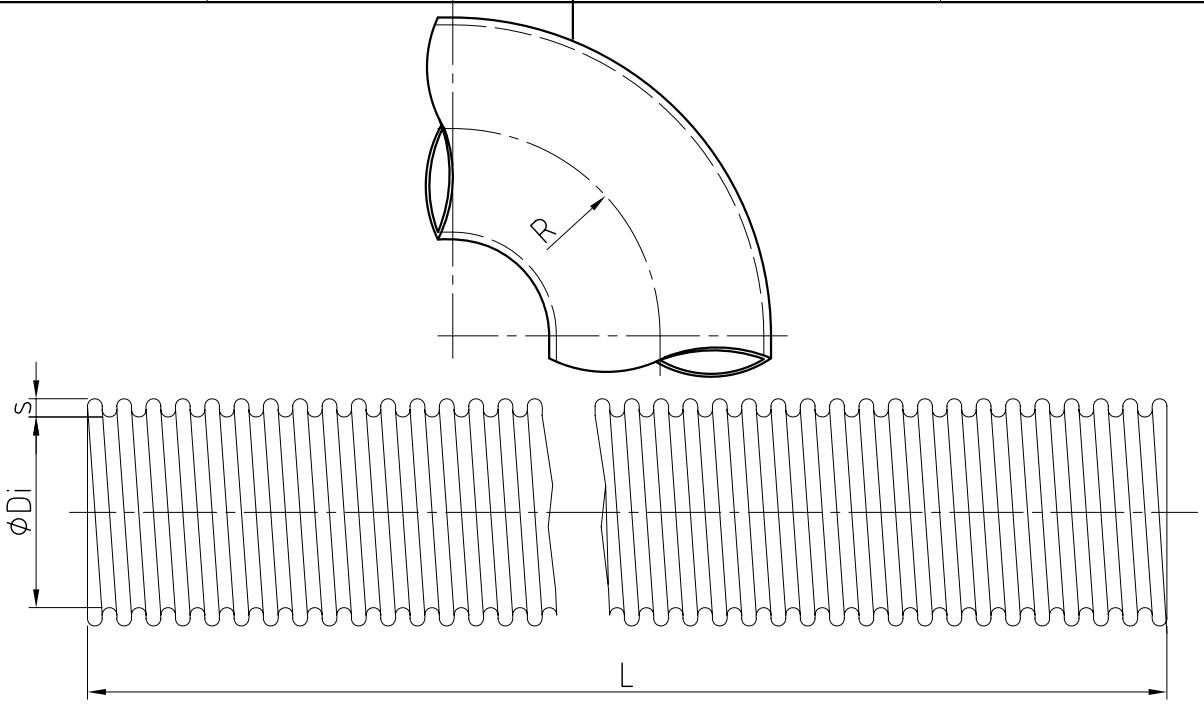

Artikel-Nr. / Article-No.	DN	12 - 100INOXMD
Innendurchmesser ØDi $^{+0,3}_{-0,1}$ Internal diameter	mm	12,0 / 14,0 / 15,5 / 18,0 / 20,0 / 22,0 / 23,0 24,4 / 25,0 / 26,5 / 28,0 / 29,0 / 30,0 /32,0 35,0 / 36,0 / 38,0 / 40,0 / 41,0 / 42,0 /43,0 45,0 / 50,0 / 55,0 / 60,0 / 63,0 / 65,0 / 70,5 72,0 / 75,0 / 80,0 / 90,0 / 100,0
Wanddicke s / Wall thickness	mm	s=1,6 ±0.2
Länge L Length L	mm	Schneidware oder max. 25m Bunde Cut lengths or max. 25m bundles
Längentoleranz / Length tolerance	mm	≤ 250 ±5,0 / > 250 ± 2 %
Biegeradius R / Bending radius	mm	≥ 2,0 × Di
Dauertemperaturbeständigkeit Continous temperature resistance	°C	≤ 350
Kurzzeittemperaturbeständigkeit Temporary temperature resistance	°C	≤ 600
Werkstoff / Material		2 x Edelstahl / 2 x stainless steel 1.4301 (DIN EN 10088), t=0,10 mm
Konformität mit Conformity to		DIN 78200 DIN 4102/A1 FMVSS 302 2002 / 95 / EG 2002 / 53 / EG

A

Toleranzen flexible Rohre und Schalldämpfer gemäß AA 09.04

Verwendbar für:

Maße ohne Toleranzangaben ISO 2768-mH
EN ISO 13920-BF

Oberfläche

	Datum	Name
Bearb.	24.01.07	Zumbrink
Gepr.	24.01.07	Fleiter
Norm		
Art.Nr.		

Zust.	Änderung	Datum	Name
A	Innendurchmesser ueberarbeitet	03.11.09	Zumb

westa-gruppe

EDV Nr. 60-05-75-Westerform-INOX-MD

Ausgabe
Datum

Maßstab 1:1 Gewicht kg Menge

Westerformrohr Typ: INOXMD

Westaflex tube type: INOXMD

60.05.75

CAD

Ursprung

Zeichnung darf nur im CAD-System geändert werden!

CAD -A4

Specification sheet for exhaust pipe supplied by Krueger Ltd

Technical Data Sheet

EXHAUST DUCTING

CONSTRUCTION (LAYERS):
SINGLE STRIP OF STAINLESS STEEL
SPIRALLY WOUND AND CORRUGATED
WITH UP TO 50% OVERLAP

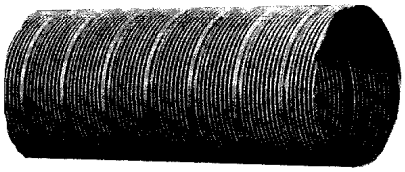

SUITABLE FOR EXHAUST DUCTING ON VEHICLES, VESSEL HEATING SYSTEMS, AIR DUCTING, ETC

DUCTING SIZE (mm)	22	24	30	38	40	50	70
ORDERING CODES	DS 02220	DS 02420	DS 03020	DS 03830	DS 04020	DS 05020	DS 07020
DIMENSIONS:							
OUTSIDE DIAMETER (mm)	25.0	27.0	33.0	41.0	43.0	53.0	73.0
WALL THICKNESS (mm)	1.50	1.50	1.50	1.5	1.50	1.50	1.50
MINIMUM BEND RADIUS (mm)	66	72	90	114	120	150	210
AVERAGE WEIGHT (kg/100m)	20.4	22.3	27.9	33.0	37.2	46.4	65.0

OTHER PROPERTIES:
OPERATING TEMPERATURE 350º C INSIDE WITH 20º C AMBIENT TEMPERATURE.
300º C INSIDE AND OUT.

THE PRODUCT MAY BE CUT WITH A FINE TOOTHED HACKSAW BLADE AND WEARING PROTECTIVE GLOVES.

KOPEX INTERNATIONAL LIMITED, Station Road, Coleshill, Birmingham B46 1HT, England.
Telephone: + 44 (0) 1675 468213. Fax: + 44 (0) 1753 693521. Website: www.kopex.co.uk

MAIB Safety Bulletin SB2/2014

MAIB
MARINE ACCIDENT INVESTIGATION BRANCH

SAFETY BULLETIN

SB2/2014 February 2014

Extracts from The United Kingdom Merchant Shipping (Accident Reporting and Investigation) Regulations 2012

Regulation 5:
"The sole objective of a safety investigation into an accident under these Regulations shall be the prevention of future accidents through the ascertainment of its causes and circumstances. It shall not be the purpose of such an investigation to determine liability nor, except so far as is necessary to achieve its objective, to apportion blame."

Regulation 16(1):
"The Chief Inspector may at any time make recommendations as to how future accidents may be prevented."

Press Enquiries:
020 7944 3387/3248

Out of hours:
020 7944 4292

Public Enquiries:
0300 330 3000

NOTE

This bulletin is not written with litigation in mind and, pursuant to Regulation 14(14) of the Merchant Shipping (Accident Reporting and Investigation) Regulations 2012, shall be inadmissible in any judicial proceedings whose purpose, or one of whose purposes is to attribute or apportion liability or blame.

All bulletins can be found on our website:
www.maib.gov.uk

For all enquiries:
Email: maib@dft.gsi.gov.uk
Tel: 023 8039 5500
Fax: 023 8023 2459

Fire and subsequent foundering of workboat

ECC *TOPAZ*

11nm east of Lowestoft

on 14 January 2014

Figure 1: *ECC Topaz* on fire (**inset:** subsequent foundering)

MAIB SAFETY BULLETIN 2/2014

This document, containing safety lessons, has been produced for marine safety purposes only, on the basis of information available to date.

The Merchant Shipping (Accident Reporting and Investigation) Regulations 2012 provide for the Chief Inspector of Marine Accidents to make recommendations at any time during the course of an investigation if, in his opinion, it is necessary or desirable to do so.

The Marine Accident Investigation Branch is carrying out an investigation into the fire and subsequent foundering of a wind farm support vessel. The most likely cause of the fire was an uninsulated air heater exhaust pipe in close proximity of the plywood structure of the vessel.

The MAIB will publish a full report on completion of the investigation.

Steve Clinch
Chief Inspector of Marine Accidents

NOTE

This bulletin is not written with litigation in mind and, pursuant to Regulation 14(14) of the Merchant Shipping (Accident Reporting and Investigation) Regulations 2012, shall not be admissible in any judicial proceedings whose purpose, or one of whose purposes, is to apportion liability or blame.

This bulletin is also available on our website: www.maib.gov.uk

Press Enquiries: 020 7944 3248/3387; Out of hours: 020 7944 4292

Public Enquiries: 0300 330 3000

Background

At approximately 1230 (BST) on 14 January 2014, the 14m wind farm support catamaran, *ECC Topaz,* caught fire 11nm east of Lowestoft. The three crew members on the vessel were unable to extinguish the fire, which spread rapidly throughout its GRP structure **(Figure 1)**, forcing them to abandon to a liferaft. There were no passengers on board at the time of the accident.

Once in the liferaft, the skipper transmitted a "Mayday" call using a hand-held VHF radio and then activated a Search and Rescue Transponder (SART). The crew of another vessel in the vicinity alerted the coastguard when they saw thick black smoke on the horizon. The crew of *ECC Topaz* were winched from the liferaft by helicopter and taken to a nearby hospital for treatment. The fire on *ECC Topaz* continued unabated and, at 1422, the burnt out remains of the vessel foundered in 33m of water **(Figure 1: inset)**.

Initial findings

There is compelling evidence to suggest the source of the fire was in way of an uninsulated section of the exhaust pipe from a diesel fired air heater that was situated in a compartment in the starboard hull, directly under the wheelhouse. A few days after the fire, the MAIB received information that crew on similar workboats had observed charring to the underside of main decks, where they were penetrated by the exhaust pipes from air heaters.

Detailed examination of one of these vessels revealed that the heater exhaust had been modified to route through a single walled, inverted U-pipe on the main deck **(Figure 2a)** to prevent sea water ingress from the exhaust overboard. As originally built, the exhaust pipe was insulated by woven glass lagging protected by an aluminium oversleeve **(Figure 3)** to prevent the hot exhaust gases (around 450ºC) from heating the surrounding area. However, where the exhaust piping had been broken to route it through the main deck,

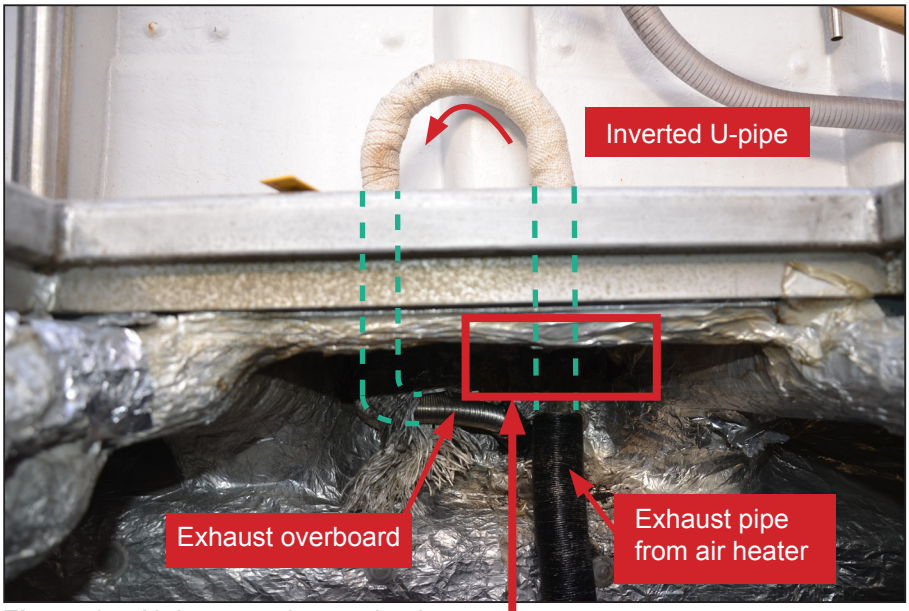

Figure 2a: Air heater exhaust pipe layout on similar vessel

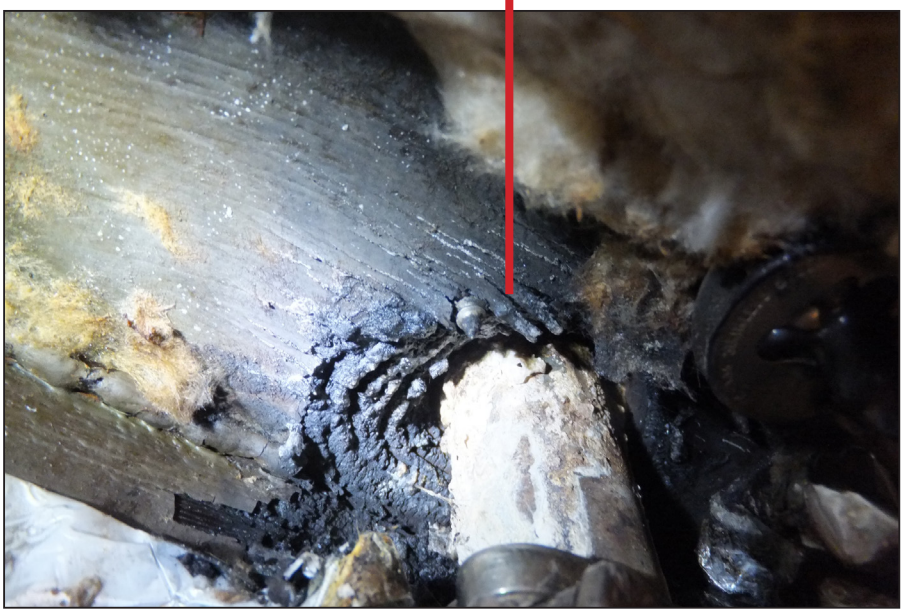

Figure 2b: Scorching under deck on similar vessel

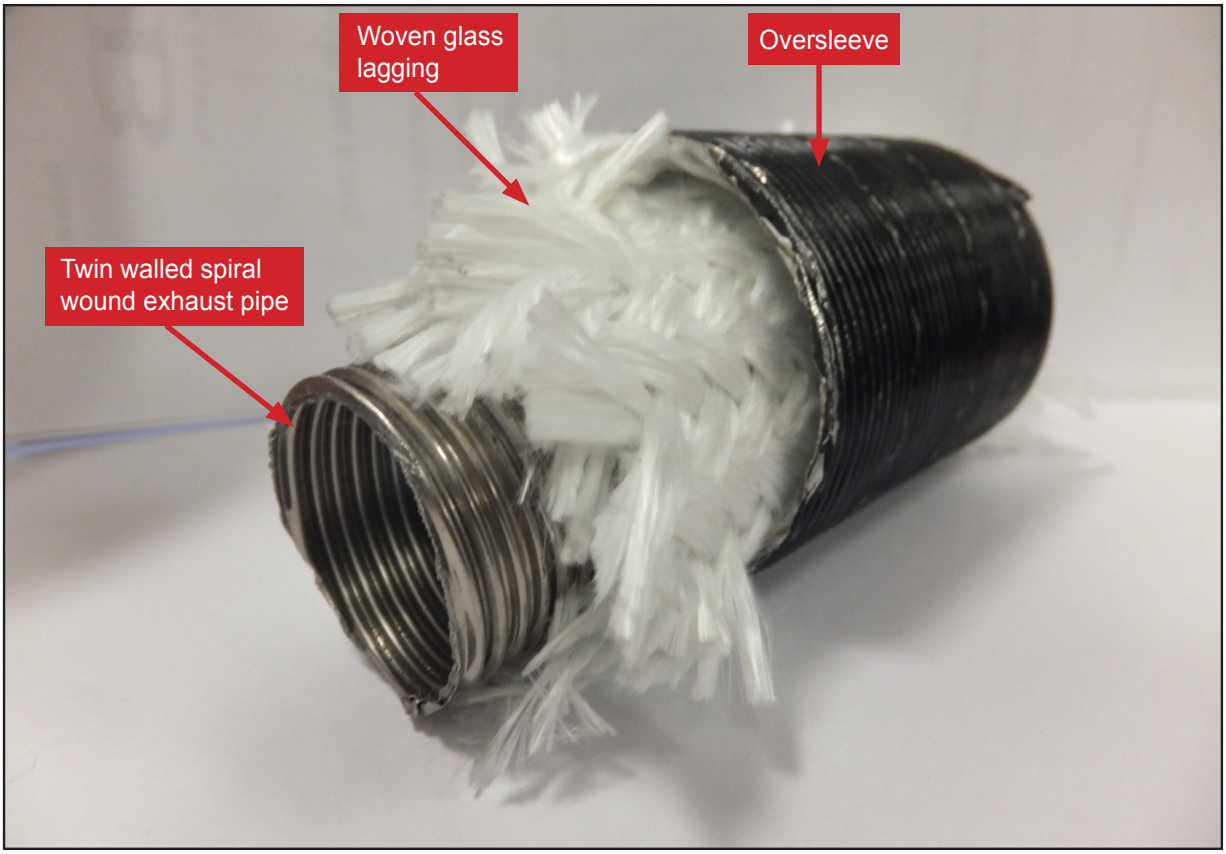

Figure 3: Heater manufacturer's supplied exhaust pipe with insulation

the connection between the heater exhaust pipe and the inverted U-pipe was not insulated. Consequently, the uninsulated section of the hot exhaust pipe in close proximity to the plywood underside of the deck, caused the charring seen in **Figure 2b**.

ECC Topaz was fitted with the same model of heater and had the same exhaust configuration. The MAIB has concluded the most likely cause of the fire on board *ECC Topaz* was the poorly insulated hot exhaust pipe igniting the plywood structure of the vessel. The compartment where the heater was situated was not fitted with any fire detection or extinguishing systems, and contained several flammable items including sacks of rags, rolls of paper towels and several small drums of oil that would have provided additional fuel for the fire once it was ignited.

Safety lessons

Uninsulated exhaust pipes will quickly reach the temperature of the exhaust gases and, when in close proximity to wood or other combustible material, the likelihood of a fire is very high. Owners and operators of vessels are strongly advised to:

- Check that all exhaust pipes on their vessels are fully insulated and do not come close to combustible material.
- Fit fire/smoke detectors in enclosed spaces where diesel-fired air heaters are installed.
- Avoid placing flammable material in compartments that contain potential heat sources. A useful reference is MGN 497 (M+F): 'Dangerous Goods – including Chemicals and other Materials – Storage and Use on Board Ships.'

Issued February 2014

MAIB Safety Flyer to the leisure boating sector

MAIB
MARINE ACCIDENT INVESTIGATION BRANCH

FLYER TO THE LEISURE BOATING SECTOR

ECC Topaz: Fire and subsequent foundering 11nm off Lowestoft, 14 January 2014

Figure 1: *ECC Topaz* on fire (**inset:** subsequent foundering)

Narrative

On 14 January 2014, at approximately 1230, the 14m wind farm support catamaran, *ECC Topaz*, caught fire off the coast of Lowestoft. The fire is thought to have originated in a compartment in the starboard hull directly under the wheelhouse. The skipper became aware of the fire when he saw smoke coming out of the heating air outlet vents. Within seconds, the fire had broken through into the wheelhouse and spread rapidly throughout the vessel's GRP structure.

Although the vessel could carry a maximum of 14 people, there were only three crew members on board on the day of the accident. Due to its rapid spread through the vessel, the crew were not able to extinguish the fire and were forced to abandon the vessel to a liferaft, from which they were airlifted to safety. The burnt out wreck of the vessel sank at 1420.

A few days after the accident, the MAIB received information from the owners of similar workboats stating that charring to the underside of the wooden deck through which an uninsulated section of a diesel fired air heater exhaust pipe was routed had been noted **(Figure 2)**. Further investigation identified that it also was possible that *ECC Topaz*'s exhaust pipe might have deteriorated, allowing hot exhaust gases to impinge directly onto the wooden deck above or flammable substances stored in the heater compartment. These included drums of diesel and lubricating oils, sacks of rags and paper rolls.

Figure 2: Scorching of the plywood underdeck on a similar vessel

Safety Lessons

Uninsulated exhausts from air heaters can reach temperatures well above the auto ignition temperature of many flammable materials including plywood, wood, paper and cotton. Therefore, any contact between either exhaust gases or uninsulated exhaust pipes and these materials has the potential to start a fire.

To ensure that your vessel is not at risk from this hazard:

- Check that all the exhaust systems on your vessel are adequately lagged.
- Inspect the exhaust pipes frequently for signs of deterioration and replace them if required.
- Follow the inspection and maintenance schedule for your vessel's air heaters as required by the manufacturer.
- Do not store flammable material in the heater compartment.

This flyer and the MAIB's investigation report are posted on our website:

www.maib.gov.uk

For all enquiries:

Marine Accident Investigation Branch

Mountbatten House, Grosvenor Square, Southampton, SO15 2JU

Tel: 023 8039 5500, Email: maib@dft.gsi.gov.uk

Marine Accident Investigation Branch **February 2015**

Marine Accident Report

INVESTORS IN PEOPLE