AIRCRAFT GENERAL ARRANGEMENT

Appendix 1

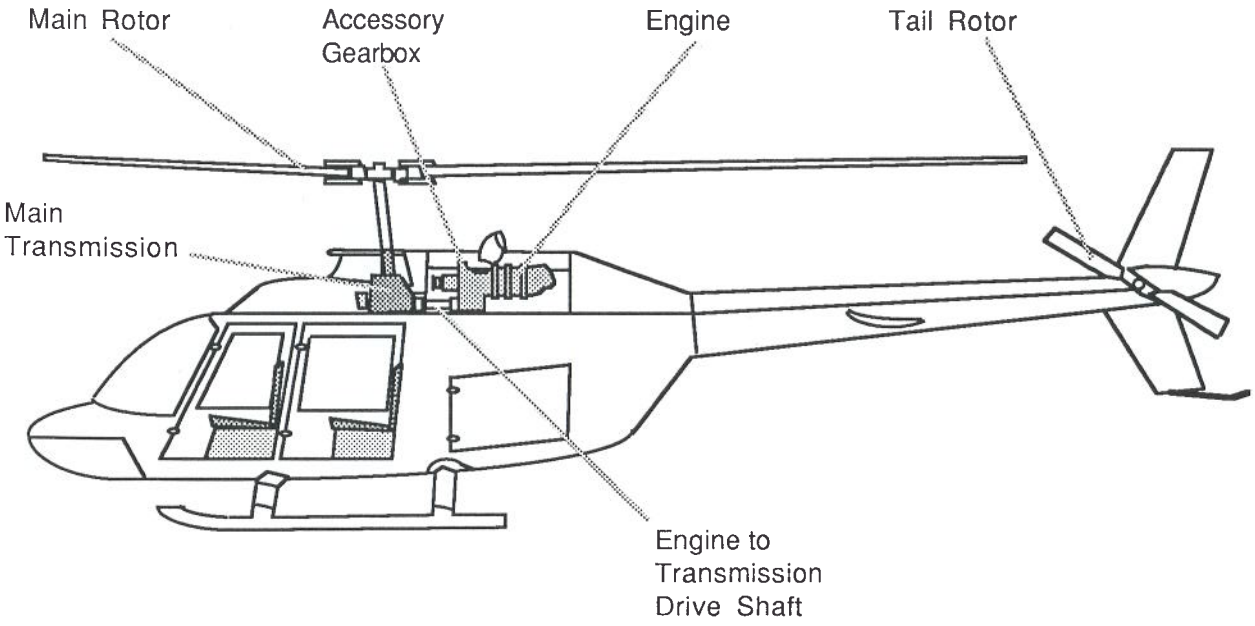

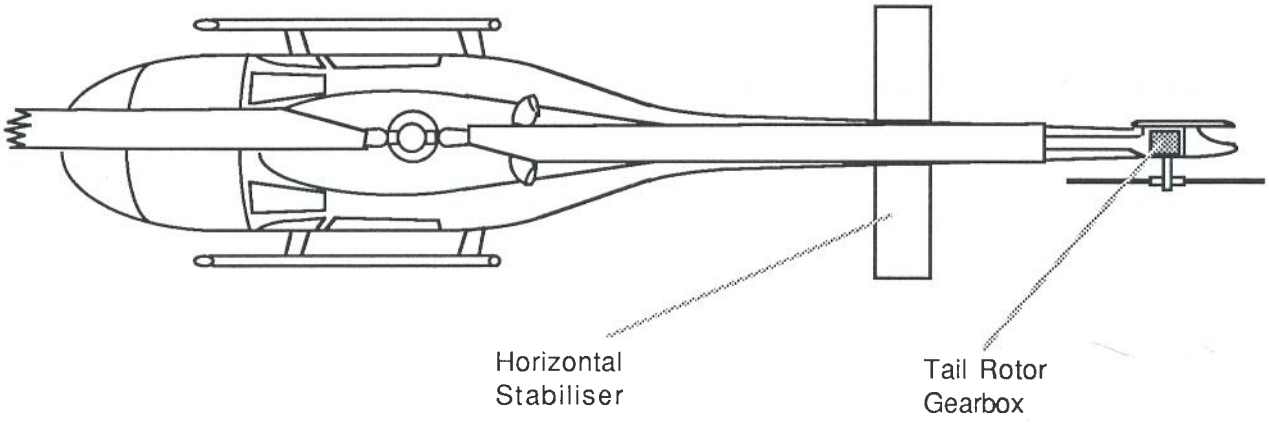

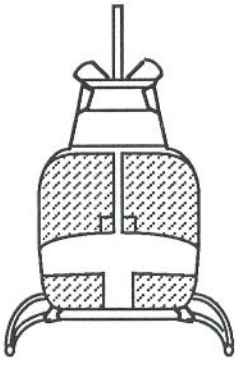

Appendix 2

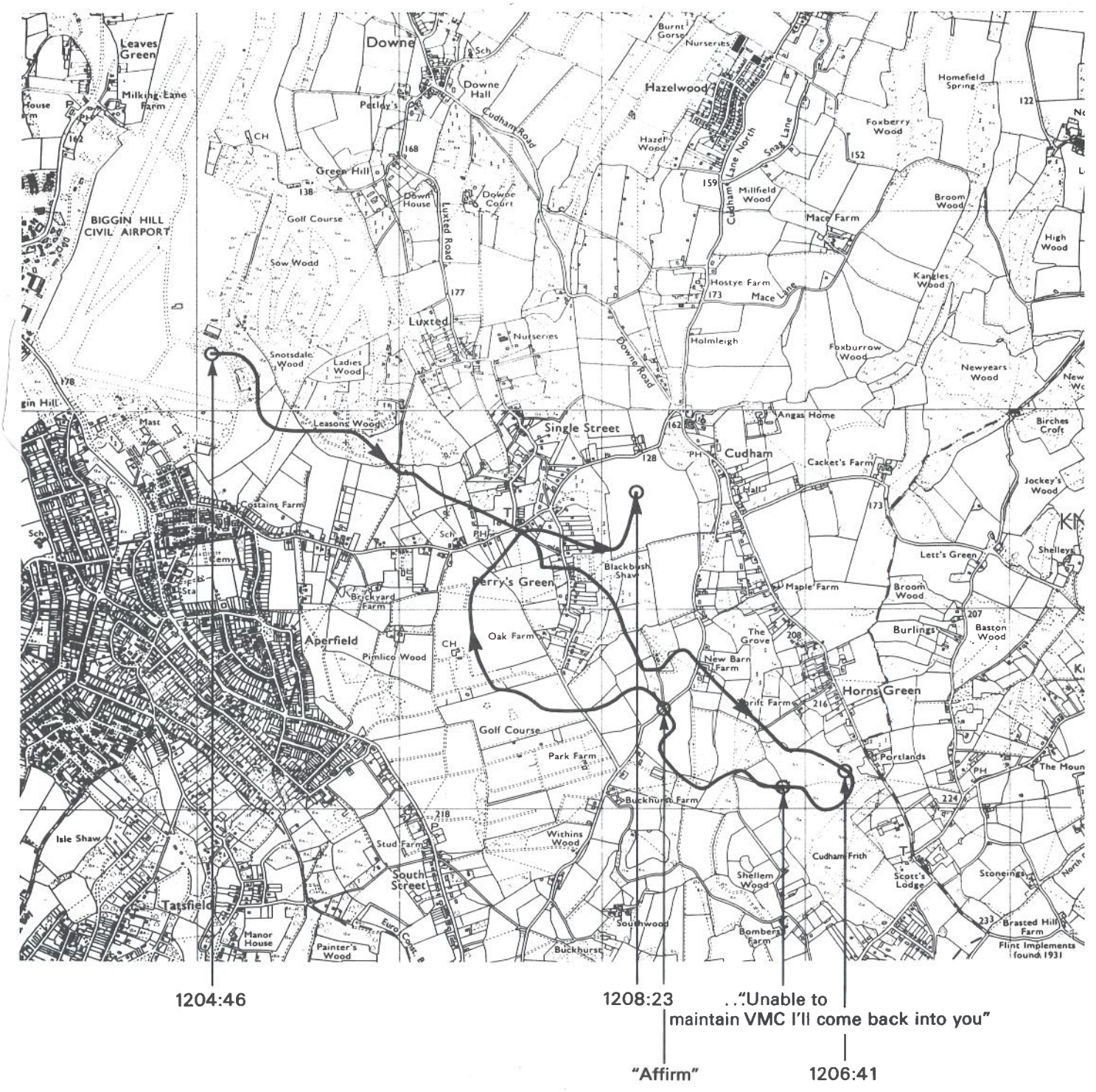

GROUND TRACK OF G–SHBB FROM BIGGIN HILL AIRPORT

POWER TURBINE GOVERNOR DRIVE

Appendix 3

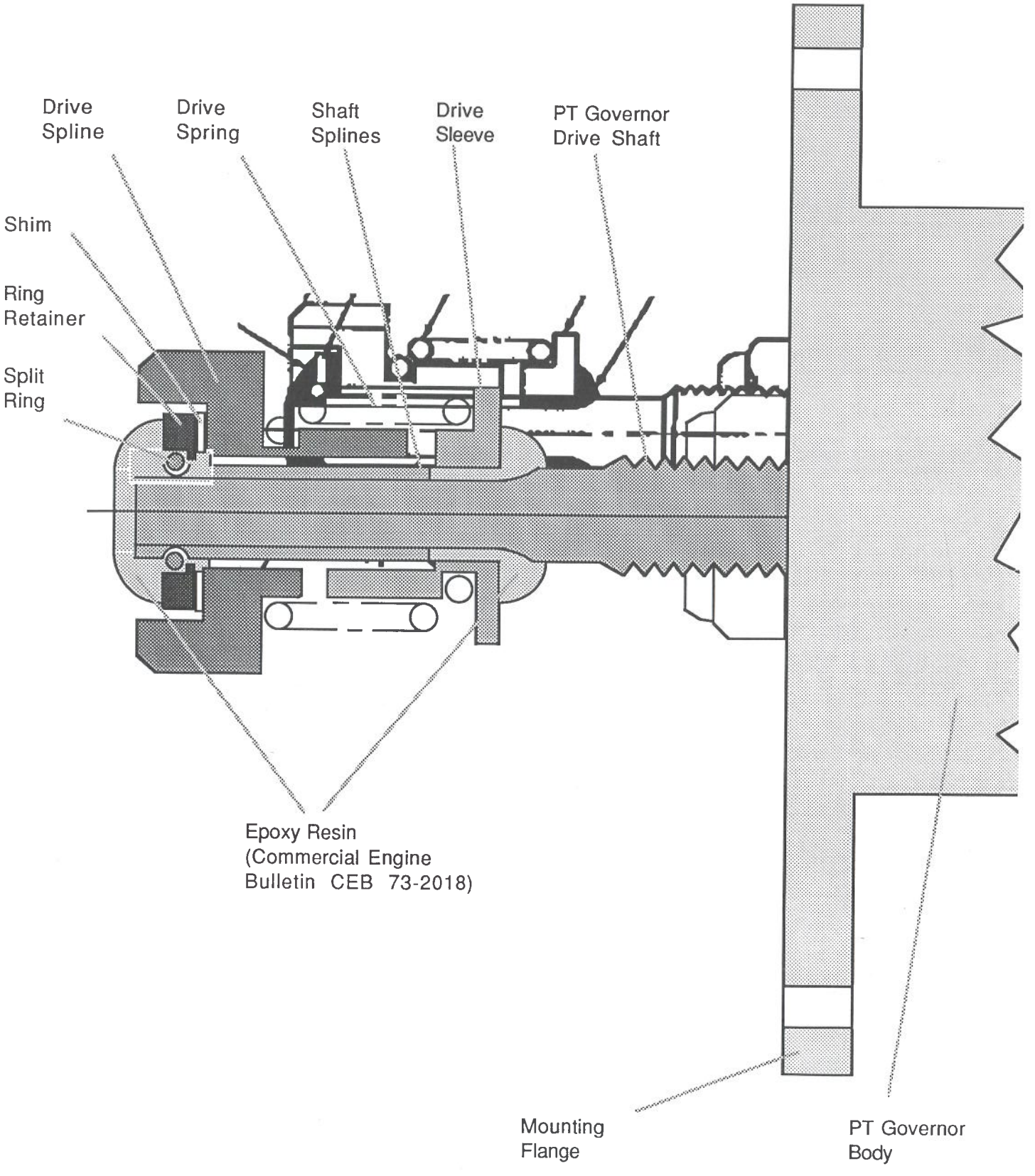

Produced from CRC supplied by the Department

Printed in the United Kingdom for HMSO
Dd 293119 C7 2/91